AF-60LP™ Micro Drive
Product Description 15-2
Product Number System Diagram 15-2
Pricing, Dimensions and Weights 15-3
Options, Accessories, and Replacement Parts 15-4
Dynamic Braking Resistors 15-5
Standard Specifications 15-6
Dimensional Drawings 15-7
Basic Wiring Diagrams 15-9

AF-650GP™ General Purpose Drive
Product Description 15-10
Product Number System Diagram 15-10
Pricing 15-11
Options and Accessories 15-13
Dimensional Drawings 15-17
Basic Wiring Diagrams 15-22
Dimensions and Weights 15-23
Dynamic Braking Resistors 15-25
Standard Specifications 15-27
Replacement Parts 15-29

AF-600FP™ Fan and Pump Drive
Product Description 15-40
Product Number System Diagram 15-40
Pricing 15-41
Options and Accessories 15-43
Dimensional Drawings 15-47
Basic Wiring Diagrams 15-52
Dimensions and Weights 15-53
Standard Specifications 15-55
Replacement Parts 15-57

AF-600FP™ Enclosed Drive Panels
Product Description 15-68
Drive Panels Product Number System Diagram 15-69
Enclosed Drives Pricing 15-70
Enclosed Drives Options 15-76
Dimensional Drawings 15-77

AF-650GP™ Enclosed Drive Panels
Product Description 15-80
Drive Panels Product Number System Diagram 15-81
Enclosed Drives Pricing 15-82
Enclosed Drives Options 15-88
Dimensional Drawings 15-89

Warranty Coverage and Technical Support Coverage, Pricing and Procedures 15-91

Product Description

The AF-60LP™ Micro Drive is a compact but powerful and easy to use AC Variable Frequency Drive. The drive is available in its standard configuration that includes built-in Brake Chopper for 2HP and above, Single-Turn Potentiometer for speed reference, and LCD Keypad Display that can be remotely mounted. Models are available at 230V single-phase from 1/4 to 3HP, 230V three-phase from 1/3 to 5HP, and 460V three-phase from 1/2 to 10HP.

With standard features like Auto-Tuning, built-in RFI Filter, Process PI Controller, and Logic Controller make the AF-60LP™ Micro Drive ideal for OEM Machinery, Fan, Mixer, and Pump applications. It's Quick Menu, Side-By-Side Mounting, and optional DIN Rail Mounting also make it a time and space saver for any Drive user. It also has Modbus RTU Serial Communications as well as NEMA 1 Kits that allow it to be integrated into your Automation Systems or stand-alone installations.

Product Numbering System Diagram

(Product number for illustrative purposes only)

Description | 6K | LP | 2 | 3 | F25 | X | 9 | A1

GE Product Code

Drive Type
- LP = AF-60LP™ Micro Drive

Input Voltage
- 2 = 208/230V, 50/60 Hz
- 4 = 460V, 50/60 Hz

Input Phase
- 1 = 1-Phase
- 3 = 3-Phase

HP Rating
- F25 = 1/4 HP
- 001 = 1 HP
- 010 = 10 HP

Factory Installed Options
- X = Keypad

Enclosure Type
- 9 = IP20/Open

Revision
- A1 = 1st Revision
- A2 = Future

Visit http://www.geindustrial.com/drives for additional product information including programming guides, drawings, programming software, an energy savings calculator, and much more.

AF-60LP™ Micro Drive
Pricing, Dimensions and Weights - Stock Units

IP 20 - Protected Chassis - 230 Vac, 1-Phase, 50/60 Hz Input

HP	kW	Amps	Product No.	List Price GO-5LP	Unit Size	H x W x D (in)	Weight (lbs)	NEMA 1 Kit	Din Rail Mounting Kit
1/4	0.18	1.2	6KLP21F25X9A1	**$275.00**	M1	6.13 x 2.76 x 6.06	2.43	NEMA1LP1	RMACLP1
1/2	0.37	2.2	6KLP21F50X9A1	**$280.00**	M1	6.13 x 2.76 x 6.06	2.43	NEMA1LP1	RMACLP1
1	0.75	4.2	6KLP21001X9A1	**$305.00**	M1	6.13 x 2.76 x 6.06	2.43	NEMA1LP1	RMACLP1
2	1.5	6.8	6KLP21002X9A1	**$360.00**	M2	7.09 x 2.95 x 6.85	3.53	NEMA1LP2	RMACLP1
3	2.2	9.6	6KLP21003X9A1	**$490.00**	M3	9.69 x 3.54 x 8.07	9.7	NEMA1LP3	N/A

IP 20 - Protected Chassis - 230 Vac, 3-Phase, 50/60 Hz Input

HP	kW	Amps	Product No.	List Price GO-5LP	Unit Size	H x W x D (in)	Weight (lbs)	NEMA 1 Kit	Din Rail Mounting Kit
1/3	0.25	1.5	6KLP23F33X9A1	**$260.00**	M1	6.13 x 2.76 x 6.06	2.43	NEMA1LP1	RMACLP1
1/2	0.37	2.2	6KLP23F50X9A1	**$280.00**	M1	6.13 x 2.76 x 6.06	2.43	NEMA1LP1	RMACLP1
1	0.75	4.2	6KLP23001X9A1	**$320.00**	M1	6.13 x 2.76 x 6.06	2.43	NEMA1LP1	RMACLP1
2	1.5	6.8	6KLP23002X9A1	**$375.00**	M2	7.09 x 2.95 x 6.85	3.53	NEMA1LP2	RMACLP1
3	2.2	9.6	6KLP23003X9A1	**$475.00**	M3	9.69 x 3.54 x 8.07	9.7	NEMA1LP3	N/A
5	3.7	15.2	6KLP23005X9A1	**$600.00**	M3	9.69 x 3.54 x 8.07	9.7	NEMA1LP3	N/A

IP 20 - Protected Chassis - 460 Vac, 3-Phase, 50/60 Hz Input

HP	kW	Amps	Product No.	List Price GO-5LP	Unit Size	H x W x D (in)	Weight (lbs)	NEMA 1 Kit	Din Rail Mounting Kit
1/2	0.37	1.2	6KLP43F50X9A1	**$430.00**	M1	6.13 x 2.76 x 6.06	2.43	NEMA1LP1	RMACLP1
1	0.75	2.2	6KLP43001X9A1	**$450.00**	M1	6.13 x 2.76 x 6.06	2.43	NEMA1LP1	RMACLP1
2	1.5	3.7	6KLP43002X9A1	**$515.00**	M2	7.09 x 2.95 x 6.85	3.53	NEMA1LP2	RMACLP1
3	2.2	5.3	6KLP43003X9A1	**$565.00**	M2	7.09 x 2.95 x 6.85	3.53	NEMA1LP2	RMACLP1
5	3.7	9	6KLP43005X9A1	**$750.00**	M3	9.69 x 3.54 x 8.07	9.7	NEMA1LP3	N/A
7.5	5.5	12	6KLP43007X9A1	**$975.00**	M3	9.69 x 3.54 x 8.07	9.7	NEMA1LP3	N/A
10	7.5	15.5	6KLP43010X9A1	**$1200.00**	M3	9.69 x 3.54 x 8.07	9.7	NEMA1LP3	N/A
15	11	23	6KLP43015X9A1	**$1740.00**	M4	11.5 x 4.92 x 9.49	13.2	NEMA1LP4	N/A
20	15	31	6KLP43020X9A1	**$2025.00**	M4	11.5 x 4.92 x 9.49	13.2	NEMA1LP4	N/A
25	18.5	37	6KLP43025X9A1	**$2475.00**	M5	13.19 x 6.5 x 9.76	20.9	NEMA1LP5	N/A
30	22	43	6KLP43030X9A1	**$2890.00**	M5	13.19 x 6.5 x 9.76	20.9	NEMA1LP5	N/A

Brake Chopper is included with 2HP drives and above

Drive Efficiency and Watt Loss - 230 Vac, 1-Phase, 50/60 Hz Input

Hp	kW	Amps	Product No.	Efficiency[1]	Watt Loss[1]
1/4	0.18	1.2	6KLP21F25X9A1	94.5	15.5
1/2	0.37	2.2	6KLP21F50X9A1	95.6	25.0
1	0.75	4.2	6KLP21001X9A1	96.0	44.0
2	1.5	6.8	6KLP21002X9A1	96.7	67.0
3	2.2	9.6	6KLP21003X9A1	97.1	85.1

Drive Efficiency and Watt Loss - 230 Vac, 3-Phase, 50/60 Hz Input

Hp	kW	Amps	Product No.	Efficiency[1]	Watt Loss[1]
1/3	0.25	1.5	6KLP23F25X9A1	94.9	20.0
1/2	0.37	2.2	6KLP23F50X9A1	95.8	24.0
1	0.75	4.2	6KLP23001X9A1	96.3	39.5
2	1.5	6.8	6KLP23002X9A1	97.2	57.0
3	2.2	9.6	6KLP23003X9A1	97.4	77.1
5	3.7	15.2	6KLP23005X9A1	97.4	122.8

Drive Efficiency and Watt Loss - 460 Vac, 3-Phase, 50/60 Hz Input

Hp	kW	Amps	Product No.	Efficiency[1]	Watt Loss[1]
1/2	0.37	1.2	6KLP43F50X9A1	95.5	25.5
1	0.75	2.2	6KLP43001X9A1	96.0	43.5
2	1.5	3.7	6KLP43002X9A1	97.2	56.5
3	2.2	5.3	6KLP43003X9A1	97.1	81.5
5	3.7	9	6KLP43005X9A1	98.0	133.5
7.5	5.5	12	6KLP43007X9A1	98.0	166.8
10	7.5	15.5	6KLP43010X9A1	98.0	217.5
15	11	23	6KLP43015X9A1	97.4	342
20	15	31	6KLP43020X9A1	97.4	454
25	18.5	37	6KLP43025X9A1	98.0	428
30	22	43	6KLP43030X9A1	97.9	520

[1]At rated load conditions

AF-60LP™ Micro Drive
Options, Accessories and Replacement Parts

Remote Mounting Kit for Keypad

Remote Mounting kit for mounting keypad on enclosure doors. Kit includes gasket, mounting brackets, and cable. Keypad is rated IP21.

Description	Product No.	List Price GO-5LP
Remote Mounting Kit for Keypad	RMKYPDACLP1	**$25.00**

Remote Mounting Kit for Keypad

DIN Rail Mounting Kit for 1HP and below drives

This adapter can be used to mount AF-60LP™ Micro Drives at 1HP and below to 35mm DIN Rail.

Description	Product No.	List Price GO-5LP
DIN Rail Mounting Kit for unit size M1 and M2[1]	RMACLP1	**$20.00**

[1]M2 drives manufactured after July 2009.

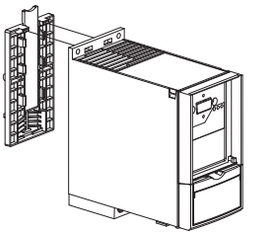

DIN Rail Mounting Kit for 1HP and below drives

NEMA 1 Kit

This kit can be mounted to the IP 20 protected AF-60LP™ Micro Drives to provide NEMA Type 1 protection.

Description	Product No.	List Price GO-5LP
NEMA 1 Kit for 1HP and below drives	NEMA1ACLP1	**$30.00**
NEMA 1 Kit for 2HP at 230V/3HP at 460V and below drives	NEMA1ACLP2	**$35.00**
NEMA 1 Kit for 3HP at 230V/5HP at 460V and above drives	NEMA1ACLP3	**$40.00**
NEMA 1 Kit for 15HP and 20HP at 460V drives	NEMA1ACLP4[2]	**$45.00**
NEMA 1 Kit for 25HP and 30HP at 460V drives	NEMA1ACLP5[2]	**$50.00**

[2]Please note that these NEMA 1 Kits only include bottom cover.

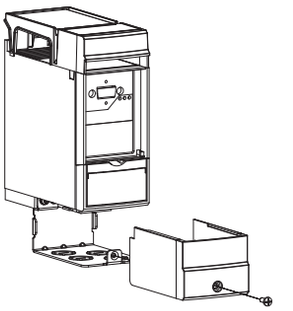

NEMA 1 Kit

De-Coupling Plate Kit

For EMC applications and strain relief for drive wiring.

Description	Product No.	List Price GO-5LP
De-Coupling Plate Kit for 2HP at 230V/3HP at 460V and below drives	DEPLTACLP1	**$15.00**
De-Coupling Plate Kit for 3HP at 230V/5HP at 460V and above drives	DEPLTACLP2	**$15.00**
De-Coupling Plate Kit for 15HP at 460V and above drives	DEPLTACLP3	**$20.00**

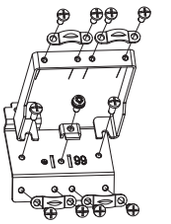

De-Coupling Plate Kit

Replacement AF-60LP™ Keypad with Potentiometer

LCD Keypad with potentiometer for the AF-60LP™ Micro Drive. Keypad is removable under power and includes copycat feature to program multiple drives. Includes hand-off-auto keys for local control of drive and large parameter and operational data display. Menu key selects between drive status, quick menu, and main menu. LED indicators for Alarms, Warnings, and Power are also included on each keypad. Keypad dimensions are: 3.35 H x 2.56 W x 1.1 D w/pot in inches.

Description	Product No.	List Price GO-5LP
Replacement AF-60LP™ Keypad with Potentiometer:	KYPDACLP1	**$60.00**

Replacement AF-60LP™ Keypad with Potentiometer

AF-60LP™ Micro Drive
Dynamic Braking Resistors

Dynamic Braking allows for faster deceleration rates then could be achieved via a coast to stop. Dynamic braking consists of the internal drive brake chopper and separate add-on dynamic braking resistors.

Important application notes:

- The AF-60LP™ Micro Drive dynamic braking can be used for stopping a load with an inertia equal to or less than the applied motor's rotor inertia.
- High inertia or overhauling loads may cause extended deceleration times which could cause overheating and tripping of the drive.
- The dynamic braking is not a holding brake. It does not prevent a motor at rest from rotating.

Note: Refer to the drives' Operating Instruction for installation and connection details.

230 Vac

			Recommended Dynamic Braking Resistor							
			10% Duty Cycle		40% Duty Cycle					
Nominal Applied Motor HP	Max. Braking Torque (%)	Brake Chopper	Product Number	List Price GO-5LP	Product Number	List Price GO-5LP	Qty. Required	Total Ohms	Total kW 10% Duty Cycle	Total kW 40% Duty Cycle
1/4	—	N/A	—		—		—	—	—	—
1/2	—	N/A	—		—		—	—	—	—
1	—	N/A	—		—		—	—	—	—
2	150	Built-in	DB2104TBNC	**$400.00**	DB2404TBNC	**$600.00**	1	65	0.25	0.8
3	150	Built-in	DB2105TBNC	**$400.00**	DB2405TBNC	**$600.00**	1	50	0.285	1
5	150	Built-in	DB2106TBNC	**$450.00**	DB2406TBNC	**$675.00**	1	25	0.8	3

460 Vac

			Recommended Dynamic Braking Resistor							
			10% Duty Cycle		40% Duty Cycle					
Nominal Applied Motor HP	Max. Braking Torque (%)	Brake Chopper	Product Number	List Price GO-5LP	Product Number	List Price GO-5LP	Qty. Required	Total Ohms	Total kW 10% Duty Cycle	Total kW 40% Duty Cycle
1/2	—	N/A	—		—		—	—	—	—
1	—	N/A	—		—		—	—	—	—
2	150	Built-in	DB4103TBNC	**$525.00**	DB4403TBNC	**$788.00**	1	310	0.25	0.8
3	150	Built-in	DB4104TBNC	**$525.00**	DB4404TBNC	**$788.00**	1	210	0.285	1.35
5	150	Built-in	DB4105TBNC	**$600.00**	DB4405TBNC	**$900.00**	1	110	0.6	2.4
7.5	150	Built-in	DB4106TBNC	**$850.00**	DB4406TBNC	**$1275.00**	1	80	0.85	3
10	150	Built-in	DB4107TBNC	**$950.00**	DB4407TBNC	**$1425.00**	1	65	1	4.5

AF-60LP™ Micro Drive
Standard Specifications

Environmental Conditions

Enclosure	IP20 (NEMA 1 with optional NEMA 1 kit)
Installation Location	Do not install in locations where product could be exposed to dust, corrosive gas, inflammable gas, oil mist, vapor, water drops or direct sunlight. There must be no salt in the atmosphere. Condensation must not be caused by sudden changes in temperature. For use at altitudes of 3280 ft. (1000M) or less without derating.
Ambient Temperature	-10° to +50°C
Ambient Humidity	5 to 95% RH (non-condensing)
Vibration	1.0g
Storage Temperature	-25° to 65°C

Standards

Approvals	CE, UL, cUL, and C-Tick Suitable for use on a circuit capable of delivering not more than 100,000 rms symmetrical amperes for 230V and 460V. WEEE and RoHS Compliant

Input Power Supply

Rated Input AC Voltage	200-240 Vac, 1-phase, 50-60 Hz, +/- 10% V 200-240 Vac, 3-phase, 50-60 Hz, +/- 10% V 380-480 Vac, 3-phase, 50-60 Hz, +/- 10% V
Maximum Voltage Imbalance	3% of rated supply voltage
True Power Factor	> 0.4 nominal at rated load
Displacement Power Factor	> 0.98
Switching on input power supply	Maximum twice/minute
Environment according to EN60664-1	Overvoltage category III/pollution degree 2

Output

Rated Output Voltage	0-100% of supply voltage
Output Frequency	0-200 Hz (Adv. Vector Control Plus Mode), 0-400 Hz (Volts/Hertz Mode)
Switching on output	Unlimited
Accel/Decel Times	0.05-3600 seconds
Overload Current Rating	150% of drive rated current for 1 minute

Control

Control Method	Sinusoidal PWM Control (V/Hz with torque vector control)
Switching Frequency Select	2, 4, 8, 12, 16 kHz
Operation Method	Keypad operation: Hand, Off, Auto Digital Input: Programmable for Start/Stop, Forward/Reverse, Jog Timer operation: Stop after predetermined time frame Link operation: RS-485 Modbus RTU
Frequency Reference Setting	Up or Down buttons on keypad or external reference
Analog Input	Built in Potentiometer 0-10 Vdc analog input 4-20ma analog input
Preset Speeds	8 presets via digital inputs
Link Operation	Drive RS-485 or Modbus RTU
Second Reference Setting	Switch from speed reference 1 to reference 2 via digital input
Trim Reference Setting	Available for speed reference offset via potentiometer, voltage input, or current input
Acceleration/Deceleration Time	0.05-3600 seconds (two acceleration and deceleration rates are selectable via digital inputs. Acceleration and deceleration patterns can be selected from linear or S-curve
DC Injection Braking	Starting frequency: 0.0-400 Hz Braking time: 0.0-60.0 seconds Braking level: 0-150% of rated current
Frequency Limit	0-400 Hz
Jump Frequency Control	Two jump (or skip) frequencies via parameter set to avoid mechanical vibration
Jogging Operation	Operation via On key or digital input (Fwd or Rev)
Auto-Restart After Power Failure	Restarts the drive without stopping after instantaneous power failure
Slip Compensation	Maintains motor at constant speed with load fluctuations
Energy Savings	Controls output voltage to minimize motor loss during constant speed operation
Start Mode Function	This functionality smoothly catches a spinning motor

Logic Controller (LC)

Logic Controller Events	Over 23 types of Programmable Events
Comparators	Array of 4 Comparators
Timers	Array of 3 Timers, adjustable from 0.0 to 3600 sec
Logic Rules	Array of 4 Boolean Logic Rules
Logic Controller States	Array of 20 Logic Controller Action States

Process Controller (PI)

Process CL Feedback Select	No function, analog input 1, analog input 2, pulse input, local bus reference
Process PI Control	Normal or Inverse
Process PI Anti Windup	Disabled or enabled
Process PI Start Speed	0.0-200 Hz
Process PI Proportional Gain	0.00-10.00
Process PI Integral Gain	0.10-9999 seconds
Process PI Feed Forward Factor	0-400%
On Reference Bandwidth	0-200%

Indication

LEDs	Green - drive is on Yellow - indicates a warning Red - indicates an alarm
Monitor Units Available	Frequency, current, voltage, power, horsepower, % load, speed, or time

Trip Codes

2	Live Zero Error
4	Line Phase Loss
7	DC Overvoltage
8	DC Undervoltage
9	Drive Overload
10	Motor Overtemperature
11	Motor Thermistor Overtemperature
12	Torque Limit
13	Overcurrent
14	Ground Fault
16	Short Circuit
17	Control Word Timeout
25	Brake Resistor Short-Circuited
27	Brake Chopper Short-Circuited
28	Brake Check
29	Power Board Overtemperature
30	Missing U Phase
31	Missing V Phase
32	Missing W Phase
38	Internal Fault
47	Control Voltage Fault
51	Auto Tune Check - Wrong Motor Parameters
52	Auto Tune Low Inom - Motor current is too low
59	Current Limit
63	Mechanical Brake Low
80	Drive restored to factory settings

Monitoring Parameters Available

Power	kW
Power	HP
Motor Voltage	V
Frequency	Hz
Motor Current	A
Frequency	%
Motor Thermal	%
DC Link Voltage	V
Drive Current	A
Drive Max Current	A
Logic Controller State	On/Off

AF-60LP™ Micro Drive
Dimensional Drawings

AF-60LP™ Micro Drive Dimensions

Unit Size	Ratings (HP) 230 V, 1Ph	230V, 3Ph	460V, 3Ph	Height (in./mm) A	A (including decoupling plate)	a	Width (in./mm) B	b	Depth (in./mm) C	Weight Lbs / Kg
M1	0.25-1	0.33-1	0.5-1	5.9/150	8.1/205	5.5/140.4	2.8/70	2.16/55	5.8/148	2.43/1.1
M2	2	2	2-3	6.9/176	9.1/230	6.6/166.4	2.9/75	2.32/59	6.6/168	3.53/1.6
M3	3	3-5	3-10	9.41/239	11.6/294	8.9/226	3.54/90	2.72/69	7.6/194	6.6/3.0
M4	-	-	15-20	11.5/292	13.7/347.5	10.7/272.4	4.9/125	3.8/97	9.8/249	13.2/6.0
M5	-	-	25-30	13.2/335	15.3/387.5	12.4/315	6.5/165	5.5/140	10/256	20.9/9.5

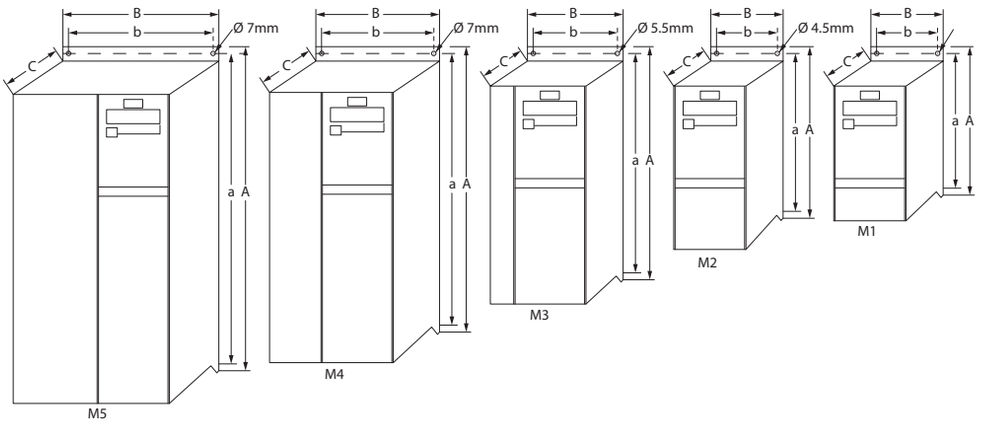

AF-60LP™ Micro Drive Keypad Dimensions

Height (in./mm) A	Width (in./mm) B	Depth (in./mm) C	Weight Lbs / Kg
3.35 / 85	2.56 / 65	1.1 / 28	0.18 / 0.08

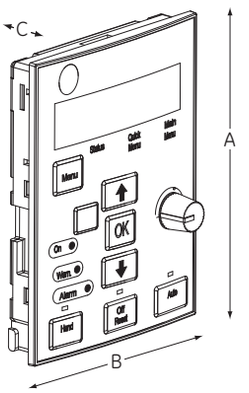

AF-60LP™ Micro Drive Keypad

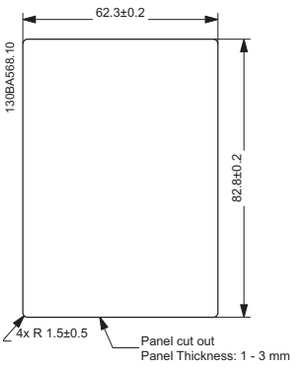

AF-60LP™ Micro Drive Keypad Cut Out

Note: Please allow 2" between drives with field installed IP21/NEMA 1 Kits. Also, please consult the relevant AF-6 Series drives Operating Instructions for recommended clearance above and below each drive rating.

DIN Rail Mounting Kit for 1HP and below drives

Product Number	A (in/mm)	B (in/mm)	C (in/mm)
RMACLP1	2.36/60	5.08/129	0.53/13.5

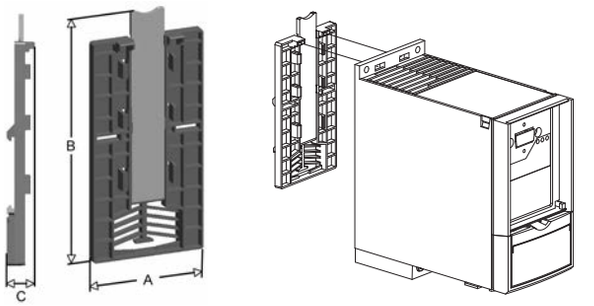

DIN Rail Mounting Kit for 1HP and below drives

NEMA 1 Field Installed Kit – Top

Product Number	A (in/mm)	B (in/mm)	C (in/mm)	D (in/mm)
NEMA1ACLP1	2.84/72	1.69/43	5.94/151	0.31/8
NEMA1ACLP2	3.03/77	1.69/43	6.77/172	0.31/8
NEMA1ACLP3	3.62/92	1.69/43	7.84/199	0.31/8

NEMA 1 Field Installed Kit – Bottom

Product Number	A (in/mm)	B (in/mm)	C (in/mm)
NEMA1ACLP1	2.76/70	2.17/55	4.21/107
NEMA1ACLP2	2.95/75	2.17/55	4.49/114
NEMA1ACLP3	3.54/90	2.17/55	4.76/121

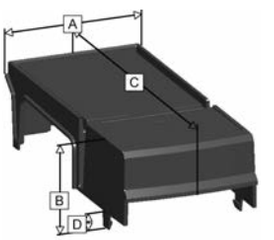

Top

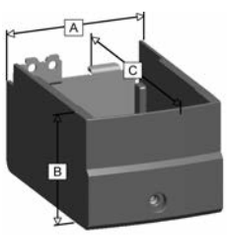

Bottom

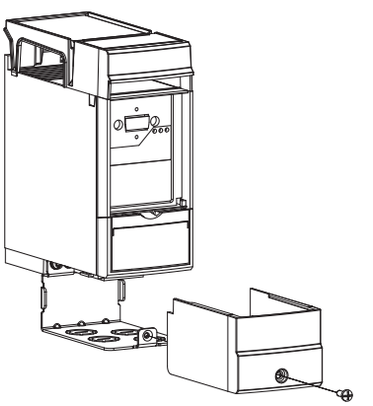

NEMA 1 Kit

De-Coupling Plate Kit

Product Number	A (in/mm)	B (in/mm)	C (in/mm)	D (in/mm)	E (in/mm)
DEPLTACLP1	2.76/70	2.05/52	3.94/100	0.55/14	0.89/22.6
DEPLTACLP2	2.76/70	2.05/52	N/A	0.55/14	0.89/22.6

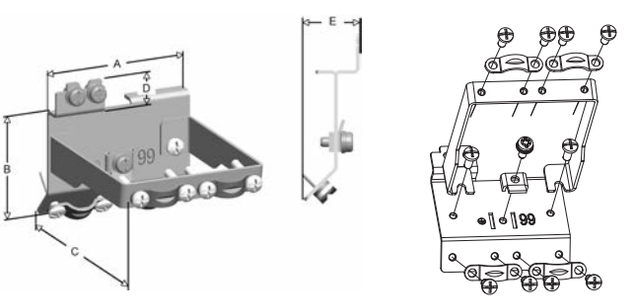

De-Coupling Plate Kit

Basic Connection Diagram

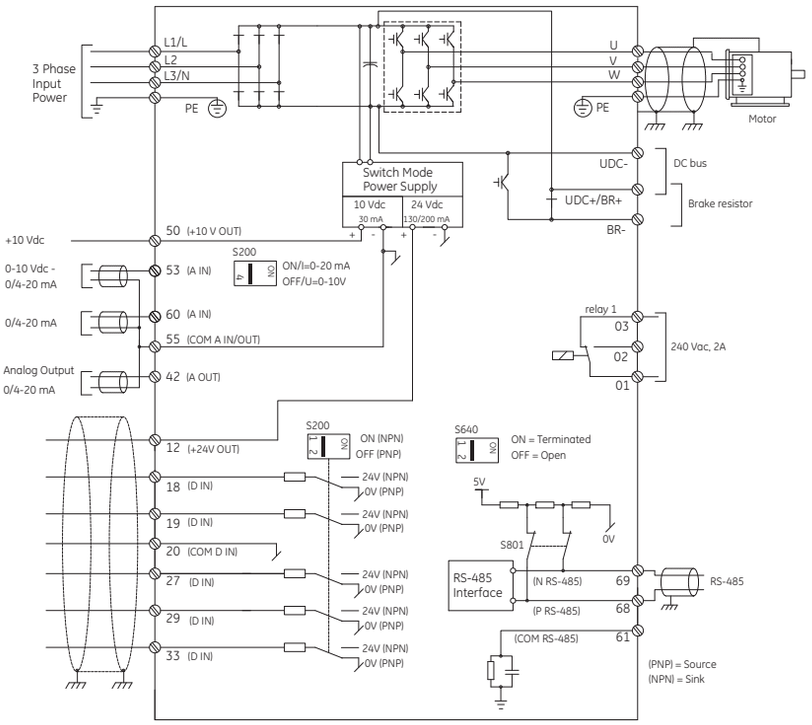

Basic Control Terminal (PNP Configuration and Drive Factory Default Settings)

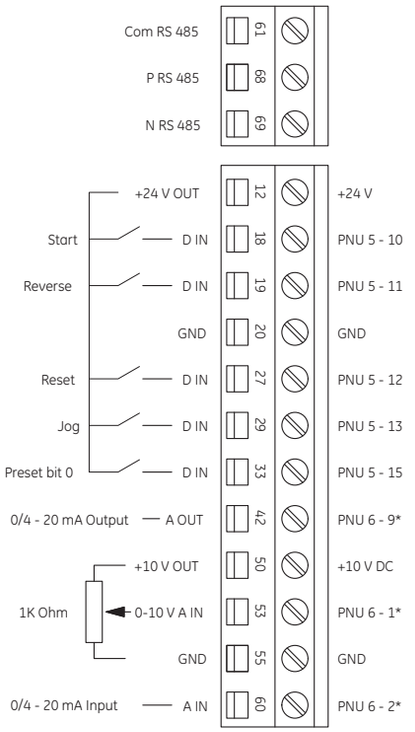

Product Description

The AF-650GP™ General Purpose Drive is a powerful, flexible, and easy to use drive with many standard features. It is ideally suited for both Heavy Duty and Light Duty applications. Available ratings include: 208/230V from 1/2 to 50HP, 460V from 1/2 to 1200HP, 575V from 1/2 to 100HP and 575/690V from 15 to 1350HP.

The drive is available in its standard configuration that includes an IP20 or IP00 Chassis, LCD Keypad that can be remote mounted, built-in DC Link Reactors, built-in Modbus RTU communications network, and RFI A2 filter. Standard features like Auto Tuning, process PID controller, energy savings mode and Logic Controller make the AF-650GP™ drive ideal for all your conveyor, extruder, machine tool or light duty variable torque applications. Its Quick Menu, Info Key (online manual), and full description keypad make it a time saver during start-up and commissioning.

Optional accessories include network communications modules for DeviceNet, Profibus DP, EtherNet IP, and soon to be available Modbus TCP/IP and Profinet RT. Drives are also available in IP54/55/NEMA 12, and IP66/NEMA 4X drive types. Optional IP21/NEMA 1 kits are available for all IP20 (100HP and below) Chassis units. Additionally, add on I/O modules, brake chopper, dynamic brake resistors, and conformal coated boards allow the drive to meet all your application needs.

Product Numbering System Diagram

(Product number for illustrative purposes only)

Description	6K	GP	2	3	F50	X	2	R	B	C	A1

GE Product Code

Drive
- GP = AF-650 General Purpose Drive

Input Voltage
- 2 = 208/230V, 50/60 Hz
- 4 = 460V, 50/60 Hz
- 5 = 575V, 50/60 Hz
- 6 = 575V-690V, 50/60 Hz

Input Phase
- 3 = 3-Phase

HP Rating
- F50 = 1/2 HP
- 010 = 10 HP
- 100 = 100 HP
- 1K0 = 1000 HP

Factory Installed Keypad
- X = Keypad

Drive Type
- 1 = IP21/Type 1
- 2 = IP55/NEMA 12
- 4 = IP66/NEMA 4X
- 9 = IP20/Open
- 8 = IP00/Open

A1/B RFI Filter
- X = No A1/B RFI Filter Installed
- R = A1/B RFI Filter Installed

Brake Chopper
- X = No Factory Installed Brake Chopper
- B = Factory Installed Brake Chopper

Conformal Coating
- X = No Conformal Coatings
- C = Conformal Coatings

Revision
- A1 = 1st Revision
- A2 = Future

Visit http://www.geindustrial.com/drives for additional product information including programming guides, drawings, programming software, an energy savings calculator, and much more.

AF-650GP™ General Purpose Drive Pricing

230V, 3-Phase, 50/60Hz Input

Heavy Duty Rating				Light Duty Rating							List Price Adders, GO-5GP					
											Drive Type (Digit 11)			Factory Installed Options		
HP Rating	kW Rating	Rated Output Amps	Overload Amps (1 Min)	Hp Rating	kW Rating	Rated Output Amps	Overload Amps (1 Min)	Standard Unit[1] Includes:	Standard Unit Product No.	List Price GO-5GP	(9) IP20 Chassis	(2) IP55 NEMA 12	(4) IP66 NEMA 4X	(R) RFI filter A1/B	(B) Brake Chopper	(C) Conformal Coating
0.33	0.25	1.8	2.88	0.33	0.25	1.8	2.88	IP20 (9) Chassis RFI: A2 Keypad	6KGP23F33X9XXXA1	**$750.00**	**std**	**$250.00**	**$550.00**	**$90.00**	**$75.00**	**$210.00**
0.5	0.37	2.4	3.84	0.5	0.37	2.4	3.84		6KGP23F50X9XXXA1	**$775.00**	**std**	**$250.00**	**$550.00**	**$90.00**	**$75.00**	**$210.00**
1	0.75	4.6	7.36	1	0.75	4.6	7.36		6KGP23001X9XXXA1	**$875.00**	**std**	**$250.00**	**$550.00**	**$120.00**	**$75.00**	**$210.00**
2	1.5	7.5	12	2	1.5	7.5	12		6KGP23002X9XXXA1	**$990.00**	**std**	**$250.00**	**$550.00**	**$160.00**	**$90.00**	**$210.00**
3	2.2	10.6	16.96	3	2.2	10.6	16.96		6KGP23003X9XXXA1	**$1200.00**	**std**	**$250.00**	**$550.00**	**$200.00**	**$115.00**	**$210.00**
5	3.7	16.7	26.72	5	3.7	16.7	26.72		6KGP23005X9XXXA1	**$1450.00**	**std**	**$275.00**	**$575.00**	**$250.00**	**$150.00**	**$210.00**
7.5	5.5	24.2	38.72	7.5/10	5.5/7.5	30.8	33.88		6KGP23007X9XXXA1	**$1525.00**	**std**	**$555.00**	**$920.00**	**$475.00**	**$180.00**	**$210.00**
10	7.5	30.8	49.28	15	11	46.2	50.82		6KGP23010X9XXXA1	**$1725.00**	**std**	**$555.00**	**$920.00**	**$550.00**	**$210.00**	**$210.00**
15	11	46.2	73.92	20	15	59.4	65.34		6KGP23015X9XXXA1	**$2400.00**	**std**	**$960.00**	**$1600.00**	**$715.00**	**$285.00**	**$210.00**
20	15	59.4	89.1	25	18.5	74.8	82.28		6KGP23020X9XXXA1	**$2900.00**	**std**	**$960.00**	**$1950.00**	**$730.00**	**$360.00**	**$210.00**
25	18.5	74.8	112.2	30	22	88	96.8		6KGP23025X9XXXA1	**$3500.00**	**std**	**$1100.00**	**$2390.00**	**$875.00**	**$410.00**	**$210.00**
30	22	88	132	40	30	115	126.5		6KGP23030X9XXXA1	**$4025.00**	**std**	**$1100.00**	**$2870.00**	**$1200.00**	**$530.00**	**$210.00**
40	30	115	172.5	50	37	143	157.3		6KGP23040X9XXXA1	**$6450.00**	**std**	**$1700.00**	**$3270.00**	**$1560.00**	**$670.00**	**$210.00**
50	37	143	214.5	60	45	170	187		6KGP23050X9XXXA1	**$7550.00**	**std**	**$1700.00**	**$3750.00**	**$1750.00**	**$825.00**	**$210.00**

[1]IP21/NEMA 1 Kits are available as Field Installed Options for all 230V drives from 0.33 HP to 50 HP. See Page 15-13.

460V, 3-Phase, 50/60Hz Input

Heavy Duty Rating				Light Duty Rating							List Price Adders, GO-5GP					
											Drive Type (Digit 11)			Factory Installed Options		
HP Rating	kW Rating	Rated Output Amps	Overload Amps (1 Min)	Hp Rating	kW Rating	Rated Output Amps	Overload Amps (1 Min)	Standard Unit[2] Includes:	Standard Unit Product No.	List Price GO-5GP	(9) IP20 Chassis	(2) IP55 NEMA 12	(4) IP66 NEMA 4X	(R) RFI filter A1/B	(B) Brake Chopper	(C) Conformal Coating
0.5	0.37	1.2	1.92	0.5	0.37	1.2	1.92	IP20 (9) Chassis RFI: A2 Keypad	6KGP43F50X9XXXA1	**$995.00**	**std**	**$250.00**	**$550.00**	**$90.00**	**$75.00**	**$210.00**
1	0.75	2.1	3.36	1	0.75	2.1	3.36		6KGP43001X9XXXA1	**$1025.00**	**std**	**$250.00**	**$550.00**	**$120.00**	**$75.00**	**$210.00**
2	1.5	3.4	5.44	2	1.5	3.4	5.44		6KGP43002X9XXXA1	**$1095.00**	**std**	**$250.00**	**$550.00**	**$160.00**	**$100.00**	**$210.00**
3	2.2	4.8	7.68	3	2.2	4.8	7.68		6KGP43003X9XXXA1	**$1275.00**	**std**	**$250.00**	**$550.00**	**$200.00**	**$125.00**	**$210.00**
5	4	8.2	13.12	5	4	8.2	13.12		6KGP43005X9XXXA1	**$1500.00**	**std**	**$250.00**	**$550.00**	**$245.00**	**$150.00**	**$210.00**
7.5	5.5	11	17.6	7.5	5.5	11	17.6		6KGP43007X9XXXA1	**$1800.00**	**std**	**$275.00**	**$575.00**	**$290.00**	**$180.00**	**$210.00**
10	7.5	14.5	23.2	10	7.5	14.5	23.2		6KGP43010X9XXXA1	**$2160.00**	**std**	**$275.00**	**$575.00**	**$335.00**	**$210.00**	**$210.00**
15	11	21	33.6	15/20	11/15	27	29.7		6KGP43015X9XXXA1	**$2700.00**	**std**	**$555.00**	**$920.00**	**$465.00**	**$285.00**	**$210.00**
20	15	27	43.2	25	18.5	34	37.4		6KGP43020X9XXXA1	**$3275.00**	**std**	**$555.00**	**$920.00**	**$545.00**	**$360.00**	**$210.00**
25	18.5	34	54.4	30	22	40	44		6KGP43025X9XXXA1	**$3950.00**	**std**	**$960.00**	**$1600.00**	**$620.00**	**$410.00**	**$210.00**
30	22	40	64	40	30	52	57.2		6KGP43030X9XXXA1	**$4750.00**	**std**	**$960.00**	**$1600.00**	**$710.00**	**$460.00**	**$210.00**
40	30	52	91.5	50	37	65	71.5		6KGP43040X9XXXA1	**$5900.00**	**std**	**$960.00**	**$1600.00**	**$730.00**	**$580.00**	**$210.00**
50	37	65	109.5	60	45	80	88		6KGP43050X9XXXA1	**$7235.00**	**std**	**$1100.00**	**$1950.00**	**$865.00**	**$720.00**	**$210.00**
60	45	80	135	75	55	105	115.5		6KGP43060X9XXXA1	**$8290.00**	**std**	**$1100.00**	**$1950.00**	**$1170.00**	**$860.00**	**$210.00**
75	55	105	159	100	75	130	143		6KGP43075X9XXXA1	**$10100.00**	**std**	**$1700.00**	**$3270.00**	**$1555.00**	**$980.00**	**$210.00**
100	75	130	220.5	125	90	160	176		6KGP43100X9XXXA1	**$13100.00**	**std**	**$1700.00**	**$3750.00**	**$1735.00**	**$1120.00**	**$210.00**

[2]IP21/NEMA 1 Kits are available as Field Installed Options for all 460V drives from 0.5 HP to 100 HP. See Page 15-13.

460V, 3-Phase, 50/60Hz Input

Heavy Duty Rating				Light Duty Rating							List Price Adders, GO-5GP					
											Drive Type (Digit 11)			Factory Installed Options		
HP Rating	kW Rating	Rated Output Amps	Overload Amps (1 Min)	Hp Rating	kW Rating	Rated Output Amps	Overload Amps (1 Min)	Standard Unit Includes:	Standard Unit Product No.	List Price GO-5GP	(8) IP00 Chassis	(1) IP21 NEMA 1	(2) IP54 NEMA 12	(R) RFI filter A1/B	(B) Brake Chopper	(C) Conformal Coating
125	90	160	240	150	110	190	209	IP00 (8) Chassis RFI: A2 Keypad	6KGP43125X8XXXA1	**$15900.00**	**std**	**$1250.00**	**$3470.00**	**$2120.00**	**$1275.00**	**$705.00**
150	110	190	285	200	132	240	264		6KGP43150X8XXXA1	**$17250.00**	**std**	**$1250.00**	**$3470.00**	**$2565.00**	**$1575.00**	**$705.00**
200	132	240	360	250	160	302	332.2		6KGP43200X8XXXA1	**$20800.00**	**std**	**$1250.00**	**$3470.00**	**$3140.00**	**$1850.00**	**$705.00**
250	160	302	453	300	200	361	397.1		6KGP43250X8XXXA1	**$22900.00**	**std**	**$1250.00**	**$3470.00**	**$3750.00**	**$2225.00**	**$705.00**
300	200	361	541.5	350	250	443	487.3		6KGP43300X8XXXA1	**$27500.00**	**std**	**$2600.00**	**$6075.00**	**$4475.00**	**$2905.00**	**$705.00**
350	250	443	664.5	450	315	540	594	IP00 (8) Chassis RFI: A2 Keypad Conformal Coated	6KGP43350X8XXCA1	**$32400.00**	**std**	**$3500.00**	**$6075.00**	**$5420.00**	**$3195.00**	**std**
450	315	540	810	500	355	590	649		6KGP43450X8XXCA1	**$37950.00**	**std**	**$3500.00**	**$6075.00**	**$6390.00**	**$4375.00**	**std**
500	355	590	885	550	400	678	745.8		6KGP43500X8XXCA1	**$54000.00**	**std**	**$3500.00**	**$6075.00**	**$7260.00**	**$4650.00**	**std**
550	400	678	1017	600	450	730	803		6KGP43550X8XXCA1	**$65000.00**	**std**	**$3500.00**	**$6075.00**	**$7260.00**	**$5180.00**	**std**
600	450	730	1095	650	500	780	858	IP21/NEMA 1 (1) RFI: A2 Keypad Conformal Coated	6KGP43600X1XXCA1	**$69500.00**	**N/A**	**std**	**$6500.00**	**$11655.00**	**$7170.00**	**std**
650	500	780	1170	750	560	890	979		6KGP43650X1XXCA1	**$82300.00**	**N/A**	**std**	**$6500.00**	**$13085.00**	**$8050.00**	**std**
750	560	890	1335	900	630	1050	1155		6KGP43750X1XXCA1	**$93800.00**	**N/A**	**std**	**$6500.00**	**$14890.00**	**$9160.00**	**std**
900	630	1050	1575	1000	710	1160	1276		6KGP43900X1XXCA1	**$109995.00**	**N/A**	**std**	**$6500.00**	**$17295.00**	**$10640.00**	**std**
1000	710	1160	1740	1200	800	1380	1518		6KGP431K0X1XXCA1	**$125500.00**	**N/A**	**std**	**$7600.00**	**$19735.00**	**$12150.00**	**std**
1200	800	1380	2070	1350	1000	1530	1683		6KGP431K2X1XXCA1	**$145835.00**	**N/A**	**std**	**$8800.00**	**$22930.00**	**$14110.00**	**std**

575V, 3-Phase, 50/60Hz Input

Heavy Duty Rating				Light Duty Rating							List Price Adders, GO-5GP					
											Drive Type (Digit 11)			Factory Installed Options (Digit 12)	(Digit 13)	(Digit 14)
HP Rating	kW Rating	Rated Output Amps	Overload Amps (1 Min)	Hp Rating	kW Rating	Rated Output Amps	Overload Amps (1 Min)	Standard Unit[1] Includes:	Standard Unit Product No.	List Price GO-5GP	(9) IP20 Chassis	(2) IP55 NEMA 12	(4) IP66 NEMA 4X	(R) RFI filter A1/B	(B) Brake Chopper	(C) Conformal Coating
1	0.75	1.8	2.88	1	0.75	1.8	2.88	IP20 (9) Chassis Keypad	6KGP53001X9XXXA1	$1155.00	std	$250.00	$550.00	N/A	$75.00	$210.00
2	1.5	2.7	4.32	2	1.5	2.7	4.32		6KGP53002X9XXXA1	$1240.00	std	$250.00	$550.00	N/A	$100.00	$210.00
3	2.2	3.9	6.24	3	2.2	3.9	6.24		6KGP53003X9XXXA1	$1450.00	std	$250.00	$550.00	N/A	$125.00	$210.00
5	4	6.1	9.76	5	4	6.1	9.76		6KGP53005X9XXXA1	$1705.00	std	$250.00	$550.00	N/A	$150.00	$210.00
7.5	5.5	9	14.4	7.5	5.5	9	14.4		6KGP53007X9XXXA1	$2050.00	std	$275.00	$575.00	N/A	$180.00	$210.00
10	7.5	11	17.6	10	7.5	11	17.6		6KGP53010X9XXXA1	$2475.00	std	$275.00	$575.00	N/A	$210.00	$210.00
15	11	18	28.8	15/20	11/15	22	24.2		6KGP53015X9XXXA1	$3090.00	std	$555.00	$920.00	N/A	$285.00	$210.00
20	15	22	35.2	25	18.5	27	29.7		6KGP53020X9XXXA1	$3750.00	std	$555.00	$920.00	N/A	$360.00	$210.00
25	18.5	27	43.2	30	22	34	37.4		6KGP53025X9XXXA1	$4525.00	std	$960.00	$1600.00	N/A	$410.00	$210.00
30	22	34	54.4	40	30	41	45.1		6KGP53030X9XXXA1	$5445.00	std	$960.00	$1600.00	N/A	$460.00	$210.00
40	30	41	65.6	50	37	52	57.2		6KGP53040X9XXXA1	$6770.00	std	$960.00	$1600.00	N/A	$580.00	$210.00
50	37	52	83.2	60	45	62	68.2		6KGP53050X9XXXA1	$8300.00	std	$1100.00	$1950.00	N/A	$720.00	$210.00
60	45	62	99.2	75	55	83	91.3		6KGP53060X9XXXA1	$9520.00	std	$1100.00	$1950.00	N/A	$860.00	$210.00
75	55	83	132.8	100	75	100	110		6KGP53075X9XXXA1	$11600.00	std	$1700.00	$3270.00	N/A	$980.00	$210.00
100	75	100	160	125	90	131	144.1		6KGP53100X9XXXA1	$15050.00	std	$1700.00	$3750.00	N/A	$1120.00	$210.00

[1]IP21/NEMA 1 Kits are available as Field Installed Options for all 575V drives from 1 HP to 100 HP. See Page 15-13.

575/690V[2], 3-Phase, 50/60Hz Input

Heavy Duty Rating				Light Duty Rating							List Price Adders, GO-5GP					
											Drive Type (Digit 11)			Factory Installed Options (Digit 12)	(Digit 13)	(Digit 14)
HP[2] Rating	kW Rating	Rated Output Amps	Overload Amps (1 Min)	Hp[2] Rating	kW Rating	Rated Output Amps	Overload Amps (1 Min)	Standard Unit Includes:	Standard Unit Product No.	List Price GO-5GP	(1) IP21 NEMA 1	(2) IP55 NEMA 12	(4) IP66 NEMA 4X	(R) RFI filter A1/B	(B) Brake Chopper	(C) Conformal Coating
15	11	13	20.8	20	15	18	20	IP21/NEMA 1 (1) RFI: A2 Keypad	6KGP63015X1XXXA1	$2875.00	std	$640.00	$1060.00	$535.00	$330.00	$240.00
20	15	18	28.8	25	18.5	22	24		6KGP63020X1XXXA1	$3500.00	std	$800.00	$1340.00	$625.00	$415.00	$240.00
25	18.5	22	35.2	30	22	27	30		6KGP63025X1XXXA1	$4140.00	std	$950.00	$1580.00	$710.00	$470.00	$240.00
30	22	27	43.2	40	30	34	37		6KGP63030X1XXXA1	$4825.00	std	$1105.00	$1840.00	$820.00	$530.00	$240.00
40	30	34	51	50	37	41	45		6KGP63040X1XXXA1	$5635.00	std	$1170.00	$2240.00	$840.00	$670.00	$240.00
50	37	41	61.5	60	45	52	56		6KGP63050X1XXXA1	$6825.00	std	$1430.00	$2750.00	$995.00	$825.00	$240.00
60	45	52	76.5	75	55	62	68		6KGP63060X1XXXA1	$7880.00	std	$1720.00	$3300.00	$1350.00	$990.00	$240.00
75	55	62	93	100	75	83	91		6KGP63075X1XXXA1	$9780.00	std	$1960.00	$3760.00	$1790.00	$1125.00	$240.00
100	75	83	124.5	125	90	100	110		6KGP63100X1XXXA1	$12175.00	std	$2245.00	$4315.00	$1995.00	$1290.00	$240.00

[2]690V horsepower ratings. Please consult AF-650GP™ Manuals for 575V ratings.

575/690V[2], 3-Phase, 50/60Hz Input

Heavy Duty Rating				Light Duty Rating							List Price Adders, GO-5GP					
											Drive Type (Digit 11)			Factory Installed Options (Digit 12)	(Digit 13)	(Digit 14)
HP[2] Rating	kW Rating	Rated Output Amps	Overload Amps (1 Min)	Hp[2] Rating	kW Rating	Rated Output Amps	Overload Amps (1 Min)	Standard Unit Includes:	Standard Unit Product No.	List Price GO-5GP	(8) IP00 Chassis	(1) IP21 NEMA 1	(2) IP54 NEMA 12	(R) RFI filter A1/B	(B) Brake Chopper	(C) Conformal Coating
125	90	108	162	150	110	131	144	IP00 (8) Chassis RFI: A2 Keypad Conformal Coated	6KGP63125X8XXCA1	$15270.00	std	$1190.00	$3990.00	N/A	$1810.00	std
150	110	131	196.5	200	132	155	171		6KGP63150X8XXCA1	$17610.00	std	$1190.00	$3990.00	N/A	$1810.00	std
200	132	155	232.5	250	160	192	211		6KGP63200X8XXCA1	$21650.00	std	$1190.00	$3990.00	N/A	$2125.00	std
250	160	192	288	300	200	242	266		6KGP63250X8XXCA1	$25325.00	std	$1190.00	$3990.00	N/A	$2560.00	std
300	200	242	363	350	250	290	319		6KGP63300X8XXCA1	$27695.00	std	$3525.00	$3990.00	N/A	$3340.00	std
350	250	290	435	400	315	344	378		6KGP63350X8XXCA1	$31360.00	std	$3525.00	$6990.00	N/A	$3675.00	std
400	315	344	516	500	400	400	440		6KGP63400X8XXCA1	$36875.00	std	$3525.00	$6990.00	N/A	$5030.00	std
500	355	380	570	600	450	450	495		6KGP63500X8XXCA1	$51565.00	std	$3525.00	$6990.00	N/A	$4920.00	std
550	400	410	615	650	500	500	550		6KGP63550X8XXCA1	$71500.00	std	$7500.00	$11170.00	N/A	consult factory	std
650	500	500	750	750	560	570	627		6KGP63650X8XXCA1	$90530.00	std	$7500.00	$11170.00	N/A		std
750	560	570	855	800	630	630	693		6KGP63750X8XXCA1	$95550.00	std	$7500.00	$11170.00	N/A		std
900	630	630	945	1000	710	730	803	IP21/NEMA 1 (1) RFI: A2 Keypad Conformal Coated	6KGP63900X1XXCA1	$120965.00	std	std	$11170.00	N/A		std
1000	710	730	1095	1200	800	850	935		6KGP631K0X1XXCA1	$138070.00	N/A	std	$11170.00	N/A		std
1150	800	850	1275	1300	900	945	1040		6KGP631K1X1XXCA1	$160400.00	N/A	std	$11170.00	N/A		std
1250	900	945	1417.5	1400	1000	1060	1166		6KGP631K2X1XXCA1	$181535.00	N/A	std	$11170.00	N/A		std
1350	1000	1060	1590	1600	1200	1260	1386		6KGP631K3X1XXCA1	$200500.00	N/A	std	$11170.00	N/A		std

[2]690V horsepower ratings. Please consult AF-650GP™ Manuals for 575V ratings.

AF-650GP™ General Purpose Drive
Field Installed IP21/NEMA 1 Add-On Option Kits

IP21/NEMA 1 Add-On Option Kits

Voltage	HP Rating	kW Rating	IP21/NEMA 1 Kit Product No.	List Price GO-5AC	Fits AF-650GP™ IP20 Drive Product No.
	0.33	0.25	NEMA1ACA2	**$110.00**	6KGP23F25X9XXXA1
	0.5	0.37	NEMA1ACA2	**$110.00**	6KGP23F50X9XXXA1
	1	0.75	NEMA1ACA2	**$110.00**	6KGP23001X9XXXA1
	2	1.5	NEMA1ACA2	**$110.00**	6KGP23002X9XXXA1
	3	2.2	NEMA1ACA2	**$110.00**	6KGP23003X9XXXA1
	5	3.7	NEMA1ACA3	**$115.00**	6KGP23005X9XXXA1
230	7.5	5.5	NEMA1ACB3	**$140.00**	6KGP23007X9XXXA1
	10	7.5	NEMA1ACB3	**$140.00**	6KGP23010X9XXXA1
	15	11	NEMA1ACB4	**$150.00**	6KGP23015X9XXXA1
	20	15	NEMA1ACB4	**$150.00**	6KGP23020X9XXXA1
	25	18.5	NEMA1ACC3	**$160.00**	6KGP23025X9XXXA1
	30	22	NEMA1ACC3	**$160.00**	6KGP23030X9XXXA1
	40	30	NEMA1ACC4	**$175.00**	6KGP23040X9XXXA1
	50	37	NEMA1ACC4	**$175.00**	6KGP23050X9XXXA1
	0.5	0.37	NEMA1ACA2	**$110.00**	6KGP43F50X9XXXA1
	1	0.75	NEMA1ACA2	**$110.00**	6KGP43001X9XXXA1
	2	1.5	NEMA1ACA2	**$110.00**	6KGP43002X9XXXA1
	3	2.2	NEMA1ACA2	**$110.00**	6KGP43003X9XXXA1
	5	3.7	NEMA1ACA2	**$110.00**	6KGP43005X9XXXA1
	7.5	5.5	NEMA1ACA3	**$115.00**	6KGP43007X9XXXA1
	10	7.5	NEMA1ACA3	**$115.00**	6KGP43010X9XXXA1
460	15	11	NEMA1ACB3	**$140.00**	6KGP43015X9XXXA1
	20	15	NEMA1ACB3	**$140.00**	6KGP43020X9XXXA1
	25	18.5	NEMA1ACB4	**$150.00**	6KGP43025X9XXXA1
	30	22	NEMA1ACB4	**$150.00**	6KGP43030X9XXXA1
	40	30	NEMA1ACB4	**$150.00**	6KGP43040X9XXXA1
	50	37	NEMA1ACC3	**$160.00**	6KGP43050X9XXXA1
	60	45	NEMA1ACC3	**$160.00**	6KGP43060X9XXXA1
	75	55	NEMA1ACC4	**$175.00**	6KGP43075X9XXXA1
	100	75	NEMA1ACC4	**$175.00**	6KGP43100X9XXXA1
	1	0.75	NEMA1ACA3	**$115.00**	6KGP53001X9XXXA1
	2	1.5	NEMA1ACA3	**$115.00**	6KGP53002X9XXXA1
	3	2.2	NEMA1ACA3	**$115.00**	6KGP53003X9XXXA1
	5	3.7	NEMA1ACA3	**$115.00**	6KGP53005X9XXXA1
	7.5	5.5	NEMA1ACA3	**$115.00**	6KGP53007X9XXXA1
	10	7.5	NEMA1ACA3	**$115.00**	6KGP53010X9XXXA1
	15	11	NEMA1ACB3	**$140.00**	6KGP53015X9XXXA1
575	20	15	NEMA1ACB3	**$140.00**	6KGP53020X9XXXA1
	25	18.5	NEMA1ACB4	**$150.00**	6KGP53025X9XXXA1
	30	22	NEMA1ACB4	**$150.00**	6KGP53030X9XXXA1
	40	30	NEMA1ACB4	**$150.00**	6KGP53040X9XXXA1
	50	37	NEMA1ACC3	**$160.00**	6KGP53050X9XXXA1
	60	45	NEMA1ACC3	**$160.00**	6KGP53060X9XXXA1
	75	55	NEMA1ACC4	**$175.00**	6KGP53075X9XXXA1
	100	75	NEMA1ACC4	**$175.00**	6KGP53100X9XXXA1
	125	90	NEMA1ACC4	**$175.00**	6KGP53125X9XXXA1

AF-650GP™ General Purpose Drive Options and Accessories

Remote Mounting Kit for graphical LCD Keypad

Remote Mounting Kit for mounting graphical LCD Keypad on enclosure door. Kit includes gasket, mounting brackets, and cable. Keypad is rated IP65.

Description	Product Number	List Price GO-5AC
Remote Mounting Kit for graphical LCD Keypad	RMKYPDAC	**$95.00**
Remote Mounting Kit without cable	OPCRMKNC	**$85.00**

Remote Mounting Kit

Profibus DP Communications Module

Profibus DP internal drive mounted module for use on AF-650GP™ and AF-600FP™ drives. Supports Profibus DP V1 communications networks.

Description	Product Number	List Price GO-5AC
Profibus DP Communications Module	OPCPDP	**$725.00**

Profibus DP Communications Module

DeviceNet Communications Module

DeviceNet internal drive mounted module for use on AF-650GP™ and AF-600FP™ drives. ODVA certified device.

Description	Product Number	List Price GO-5AC
DeviceNet Communications Module	OPCDEV	**$600.00**

DeviceNet Communications Module

Ethernet IP Communications Module[1]

Ethernet IP internal drive mounted module for use on AF-650GP™ and AF-600FP™ drives. ODVA certified device. Features 2-Port built-in switch. Also includes webserver and email notification.

Description	Product Number	List Price GO-5AC
Ethernet/IP Communications Module	OPCEIP	**$700.00**

[1]Requires I/O and network slots and cannot be used with any other network or I/O modules.

Modbus TCP Communications Module

Modbus TCP internal drive mounted module for use on AF-650GP™ and AF-600FP™ drives.

Description	Product Number	List Price GO-5AC
Modbus TCP Communications Module	OPCMBTCP	**$700.00**

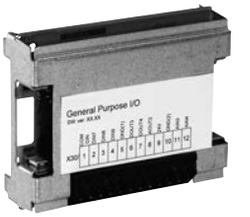

General Purpose I/O Module

ProfiNet RT Communications Module

ProfiNet RT internal drive mounted module for use on AF-650GP™ and AF-600FP™ drives.

Description	Product Number	List Price GO-5AC
ProfiNet RT Communications Module	OPCPRT	**$700.00**

General Purpose I/O Module

General Purpose I/O internal drive mounted module for use on AF-650GP™ and AF-600FP™ drives. Module includes:

3) 24V Digital Inputs
2) PNP/NPN Digital Outputs
2) 0-10V Analog Inputs
1) 0/4-20mA Analog Output

Description	Product Number	List Price GO-5AC
General Purpose I/O Module	OPCGPIO	**$475.00**

AF-650GP™ General Purpose Drive Options and Accessories

Encoder Module

Encoder internal drive mounted module for use on the AF-650GP™ drive. Module supports all 5V incremental encoders. Also supports Hyperface SinCos encoders.

Description	Product Number	List Price GO-5AC
Encoder Input Module	OPCENC	**$400.00**

Encoder Module

Resolver Module

Resolver internal drive mounted module for use on the AF-650GP™ drive. Module supports 4-8Vrms, 2.5kHz - 15kHz, 50mA resolvers. Resolution is 10bit at 4Vrms.

Description	Product Number	List Price GO-5AC
Resolver Input Module	OPCRES	**$400.00**

Resolver Module

Relay Output Module

Relay Output internal drive mounted module for use on the AF-650GP™ and AF-600FP™ drives. Module adds (3) Form C relay outputs to the drive. Relays are rated at 2A at 240V resistive load.

Description	Product Number	List Price GO-5AC
Relay Output Module	OPCRLY	**$475.00**

Relay Output Module

24V DC External Supply Module

24V DC External Supply internal drive mounted module for use on the AF-650GP™ and AF-600FP™ drives. This module accepts an external 24V DC supply which is used to keep the control board of the drive and other option modules powered in the event of a Line side power outage. Can be used with Communications and I/O Modules.

Description	Product Number	List Price GO-5AC
24V DC External Supply Module	OPC24VPS	**$240.00**

24V DC External Supply Module

Safe PLC I/O Module

Safe PLC I/O internal drive mounted module for use on the AF-650GP™ drive. This module provides a safety input based on a single pole 24V DC input.

Description	Product Number	List Price GO-5AC
Safe PLC I/O Module	OPCSAFE	**$450.00**

Safe PLC I/O Module

Screw Terminal Accessory

Screw Terminal Accessory is available for field installation on AF-650GP™ and AF-600FP™ drives. These screw terminals can replace the cage clamp terminals which ship with each drive. This set of three terminals are for the digital inputs, analog I/O, and RS485 connection.

Description	Product Number	List Price GO-5AC
Screw Terminal Accessory	OPCTERM	**$25.00**

Pedestal Kit

Pedestal Kit allows Unit Size 41 and 42 drives (NEMA 1 and 12, 150HP to 350/400HP at 460V/575V AF-600 FP and 125HP to 300/400HP at 460/690V AF-650 GP) to be floor mounted.

Description	Product Number	List Price GO-5AC
Pedestal Kit	OPC4XPED	**$875.00**

USB Kit

This kit allows for the USB programming terminal to be brought out to the front cover of the drive. Works with all drive types.

Description	Product Number	List Price GO-5AC
For all drives up to Unit Size 5X	OPCUSB	**$75.00**
For all Unit Size 6X drives	OPCUSB6X	**$225.00**

Power Shields

These shields are used to cover the drive power terminals on NEMA 1 and NEMA 12 drive types.

Description	Product Number	List Price GO-5AC
For Unit Size 41 and 42 drives	OPCCOVER4142	**$520.00**
For Unit Size 51 drives	OPCCOVER51	**$1305.00**

AF-650GP™ General Purpose Drive
Dimensional Drawings

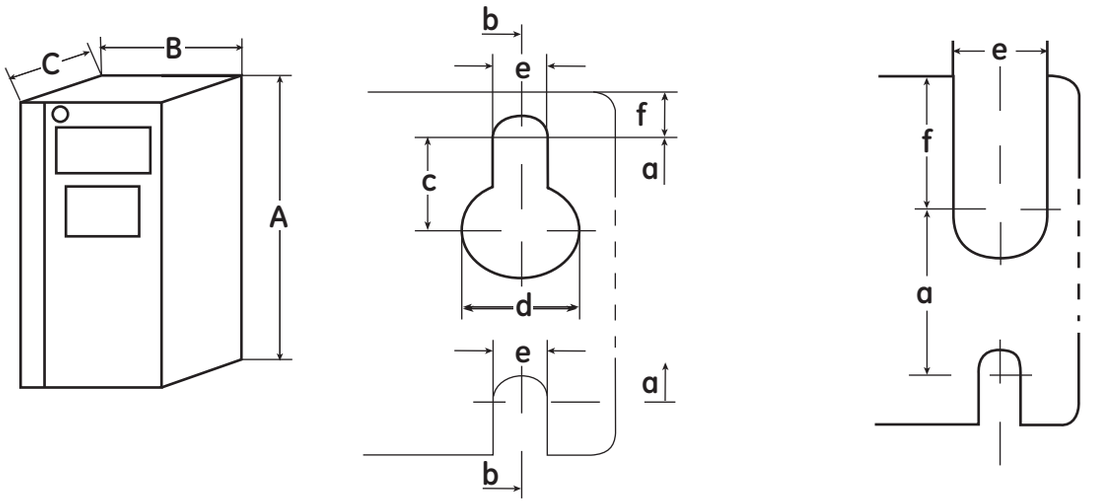

Mechanical Dimensions, 1X Unit Sizes

Unit Size	Dimensions	12	13	15
Drive Type		IP20 Open Chassis	IP20 Open Chassis	NEMA 12/NEMA 4
Voltage				
240V		0.33 to 3HP	5HP	0.33 to 5HP
460V		0.5 to 5HP	7.5 to 10HP	0.5 to 10HP
575V			1 to 10HP	1 to 10HP
Height				
Height of backplate	A	10.55 in	10.55 in	16.54 in
Height with de-coupling plate	A	14.72 in	14.72 in	—
Distance between mounting holes	a	10.12 in	10.12 in	15.83 in
Width				
Width of backplate	B	3.54 in	5.12 in	9.53 in
Distance between mounting holes	b	2.76 in	4.33 in	8.46 in
Depth				
Depth without I/O and/or Network Option	C	8.07 in	8.07 in	7.68 in
Depth with I/O and/or Network Option	C	8.67 in	8.67 in	7.68 in
Screw Holes				
	c	0.315 in	0.315 in	0.325 in
	d	0.433 in	0.433 in	0.472 in
	e	0.216 in	0.216 in	0.256 in
	f	0.354 in	0.354 in	0.354 in
Weight		10.8 lbs	14.5 lbs	29.7/31.2 lbs

Mechanical Dimensions, 2X Unit Sizes

Unit Size	Dimensions	21	22	23	24
Drive Type		NEMA 12/NEMA 4	NEMA 12/NEMA 4	IP20 Open Chassis	IP20 Open Chassis
Voltage					
240V		7.5 to 10HP	15HP	7.5 to 10HP	15 to 20HP
460V		15 to 20HP	25 to 30HP	15 to 20HP	25 to 40HP
575V		15 to 20HP	25 to 30HP	15 to 20HP	25 to 40HP
Height					
Height of backplate	A	18.9 in	25.6 in	15.7 in	20.5 in
Height with de-coupling plate	A	—	—	16.54 in	23.43 in
Distance between mounting holes	a	17.9 in	24.6 in	14.96 in	19.5 in
Width					
Width of backplate	B	9.53 in	9.53 in	6.5 in	9.06 in
Distance between mounting holes	b	8.27 in	8.27 in	5.5 in	7.87 in
Depth					
Depth without I/O and/or Network Option	C	10.24 in	10.24 in	9.81 in	9.53 in
Depth with I/O and/or Network Option	C	10.24 in	10.24 in	10.31 in	9.53 in
Screw Holes					
	c	0.472 in	0.472 in	0.315 in	—
	d	0.748 in	0.748 in	0.472 in	—
	e	0.354 in	0.354 in	0.268 in	0.335 in
	f	0.354 in	0.354 in	0.31 in	0.59 in
Weight		50.6 lbs	59.5 lbs	26.4 lbs	51.7 lbs

AF-650GP™ General Purpose Drive Dimensional Drawings

Mechanical Dimensions, 3X Unit Sizes

Unit Size	Dimensions	31	32	33	34
Drive Type		NEMA 12/NEMA 4	NEMA 12/NEMA 4	IP20 Open Chassis	IP20 Open Chassis
Voltage					
240V		20 to 30HP	40 to 50HP	25 to 30HP	40 to 50HP
460V		40 to 60HP	75 to 100HP	50 to 60HP	75 to 100HP
575V		40 to 60HP	75 to 100HP	50 to 60HP	75 to 100HP
Height					
Height of backplate	A	26.78 in	30.31 in	21.65 in	25.98 in
Height with de-coupling plate	A	—	—	24.8 in	31.5 in
Distance between mounting holes	a	25.51 in	29.1 in	20.51 in	24.84 in
Width					
Width of backplate	B	12.13 in	14.57 in	12.13 in	14.57 in
Distance between mounting holes	b	10.71 in	13.15 in	10.63 in	12.99 in
Depth					
Depth without I/O and/or Network Option	C	12.2 in	13.19 in	13.12 in	13.12 in
Depth with I/O and/or Network Option	C	12.2 in	13.19 in	13.12 in	13.12 in
Screw Holes					
	c	0.492 in	0.492 in	—	—
	d	0.748 in	0.748 in	—	—
	e	0.354 in	0.354 in	0.335 in	0.335 in
	f	0.386 in	0.386 in	0.67 in	0.67 in
Weight		99 lbs	143 lbs	77 lbs	110 lbs

Mechanical Dimensions IP20 Open Chassis Drives with Field Installed IP21/NEMA 1 Kits[1]

Unit Size	12	13	23	24	33	34
Drive Type	IP20 Open Chassis with IP21/NEMA 1 Kit	IP20 Open Chassis with IP21/NEMA 1 Kit	IP20 Open Chassis with IP21/NEMA 1 Kit	IP20 Open Chassis with IP21/NEMA 1 Kit	IP20 Open Chassis with IP21/NEMA 1 Kit	IP20 Open Chassis with IP21/NEMA 1 Kit
Voltage						
240V	0.33 to 3HP	5HP	7.5 to 10HP	15 to 20HP	25 to 30HP	40 to 50HP
460V	0.5 to 5HP	7.5 to 10HP	15 to 20HP	25 to 40HP	50 to 60HP	75 to 100HP
575V		1 to 10HP	15 to 20HP	25 to 40HP	50 to 60HP	75 to 100HP
Height						
Height with Kit	14.76 in	14.76 in	18.7 in	26.4 in	29.7 in	37.4 in
Width						
Width of backplate	3.71 in	5.12 in	6.5 in	9.1 in	12.1 in	14.6 in
Distance between mounting holes	2.76 in	4.33 in	5.5 in	7.9 in	10.6 in	13.0 in
Depth						
Depth without I/O and/or Network Option	8.07 in	8.07 in	9.81 in	9.53 in	13.3 in	13.3 in
Depth with I/O and/or Network Option	8.67 in	8.67 in	10.31 in	9.53 in	13.3 in	13.3 in

[1]Please consult IP21/NEMA 1 Kit Instructions for further mounting details and dimensions.

Note: Please allow 2" between drives with field installed IP21/NEMA 1 Kits. Also, please consult the relevant AF-6 Series drives Operating Instructions for recommended clearance above and below each drive rating.

AF-650GP™ General Purpose Drive
Dimensional Drawings

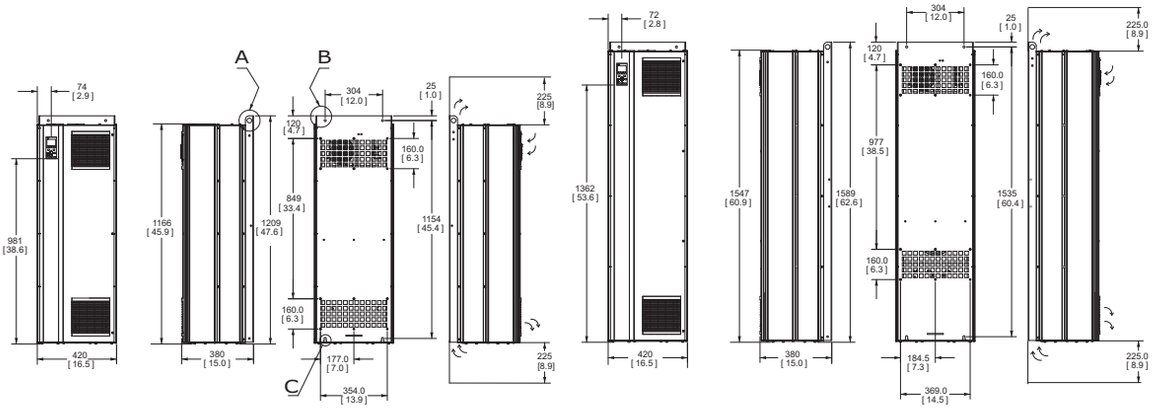

Unit Size 41 IP21 and IP54/UL and NEMA Type 1 and 12 Unit Size 42

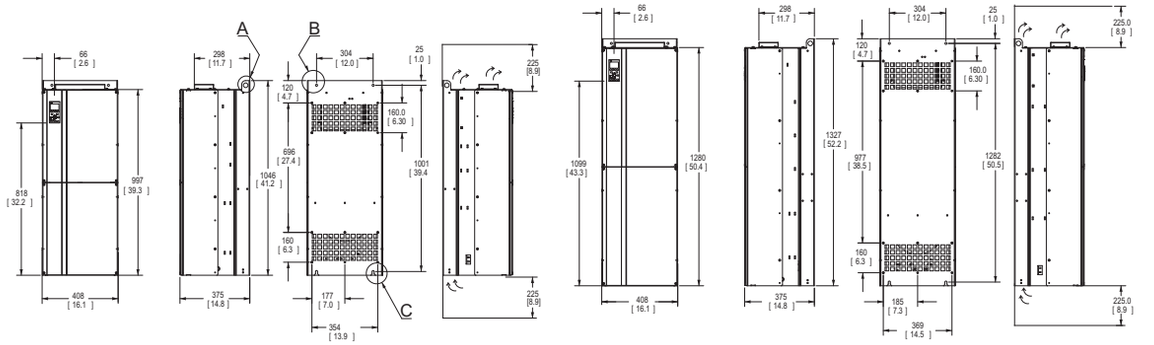

Unit Size 43 IP00/Chassis Unit Size 44

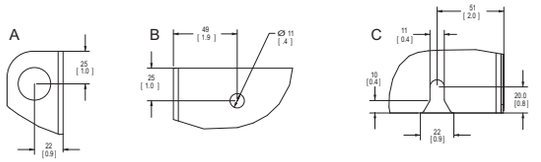

IP00/IP21/IP54—All Sizes

Unit Size	41	42	43	44
Drive Type	NEMA 1/NEMA 12	NEMA 1/NEMA 12	IP00 Open Chassis	IP00 Open Chassis
Voltage				
460V	125 to 150HP	200 to 300HP	125 to 150HP	200 to 300HP
690V	125 to 200HP	250 to 400HP	125 to 200HP	250 to 400HP
Shipping Dimensions				
Height	25.6 in	25.6 in	25.6 in	25.6 in
Width	68.11 in	68.11 in	48.03 in	58.66 in
Depth	22.44 in	22.44 in	22.44 in	22.44 in
Drive Dimensions				
Height	47.6 in	62.56 in	41.18 in	52.24 in
Width	16.54 in	16.54 in	16.06 in	16.06 in
Depth	14.96 in	14.96 in	14.76 in	14.76 in
Weight	228.8 lbs	332.2 lbs	200.2 lbs	303.6 lbs

AF-650GP™ General Purpose Drive Dimensional Drawings

Unit Size 51 Dimensions

Drive Type	NEMA 1/NEMA 12
Voltage	
460V	350 to 550HP
690V	500 to 750HP
Shipping Dimensions	
Height	33.1 in
Width	86.5 in
Depth	28.9 in
Drive Dimensions	
Height	78.7 in
Width	23.6 in
Depth	19.4 in
Weight	690 lbs

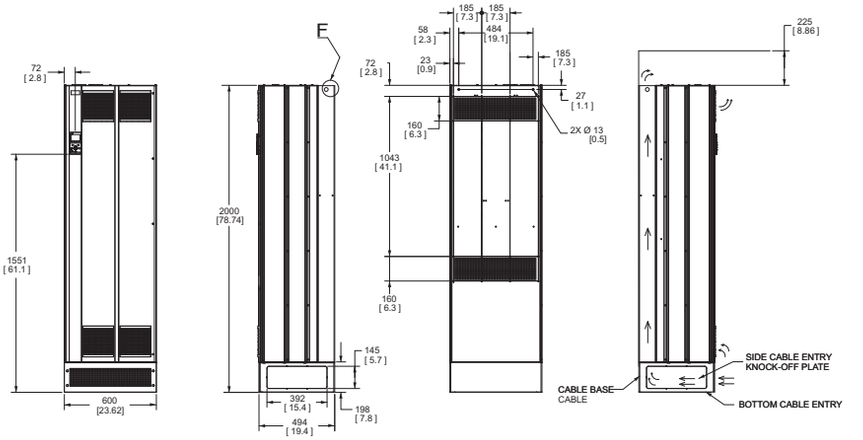

Unit Size 51, IP21 and IP54/UL and NEMA Type 1 and 12

Unit Size 52 Dimensions

Drive Type	IP00 Open Chassis
Voltage	
460V	350 to 550HP
690V	500 to 750HP
Shipping Dimensions	
Height	32.7 in
Width	67.1 in
Depth	28.9 in
Drive Dimensions	
Height	60.9 in
Width	23.1 in
Depth	19.6 in
Weight	610 lbs

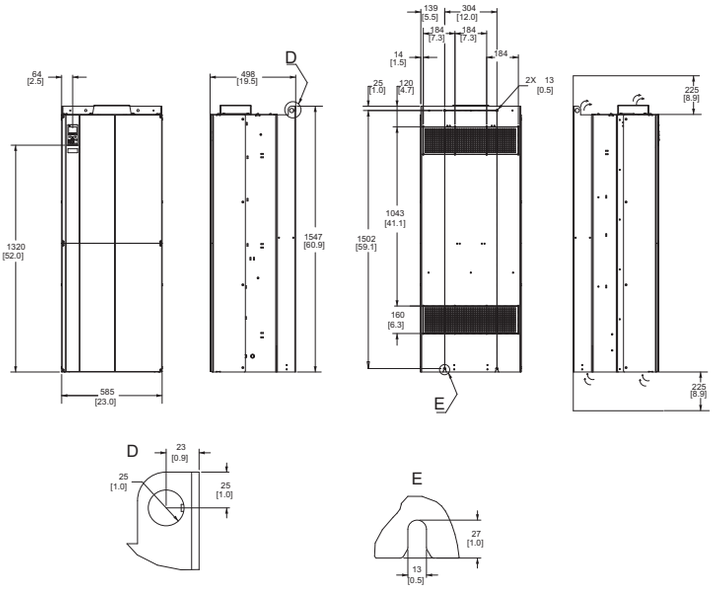

Unit Size 52, IP00/Chassis

Unit Size 61 Dimensions

Drive Type	NEMA 1/NEMA 12
Voltage	
460V	600 to 900HP
690V	900 to 1150HP
Shipping Dimensions	
Height	91.5 in
Width	61.8 in
Depth	36.5 in
Drive Dimensions	
Height	90 in
Width	55 in
Depth	24 in
Weight	2213 lbs

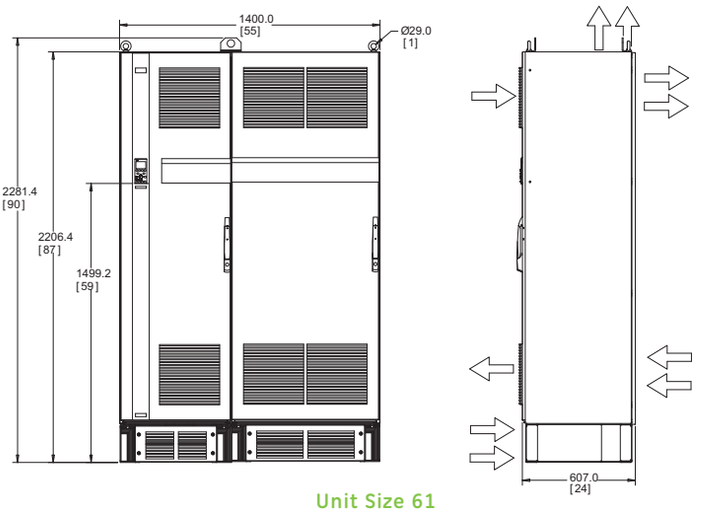

Unit Size 61

AF-650GP™ General Purpose Drive
Dimensional Drawings

Unit Size 62 Dimensions

Drive Type	NEMA 1/NEMA 12
Voltage	
460V	1000 to 1200HP
690V	1250 to 1350HP
Shipping Dimensions	
Height	91.5 in
Width	77.2 in
Depth	36.5 in
Drive Dimensions	
Height	90 in
Width	71 in
Depth	24 in
Weight	2782 lbs

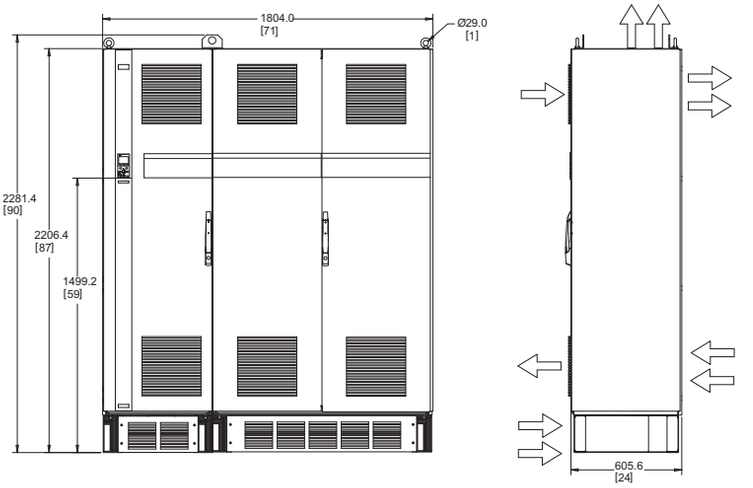

Unit Size 62

Unit Size 63 Dimensions

Drive Type	NEMA 1/NEMA 12
Voltage	
460V	600 to 900HP
690V	900 to 1150HP
Shipping Dimensions	
Height	91.5 in
Width	85 in
Depth	36.5 in
Drive Dimensions	
Height	90 in
Width	79 in
Depth	24 in
Weight	2864 lbs

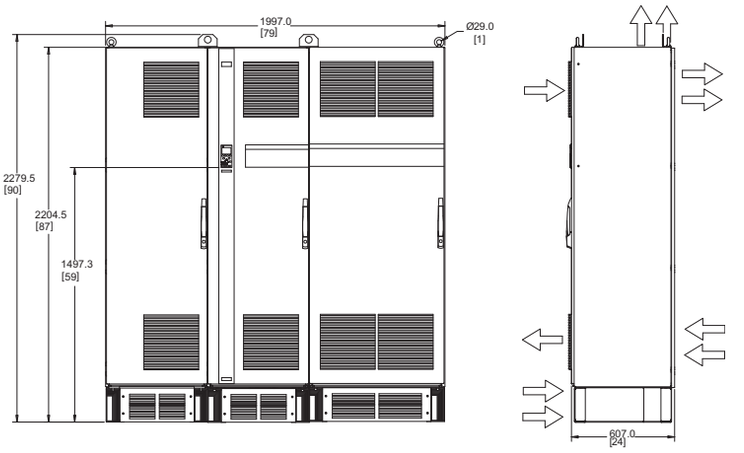

Unit Size 63

Unit Size 64 Dimensions

Drive Type	NEMA 1/NEMA 12
Voltage	
460V	1000 to 1200HP
690V	1250 to 1350HP
Shipping Dimensions	
Height	91.5 in
Width	100.1 in
Depth	36.5 in
Drive Dimensions	
Height	90 in
Width	94.5 in
Depth	24 in
Weight	3397 lbs

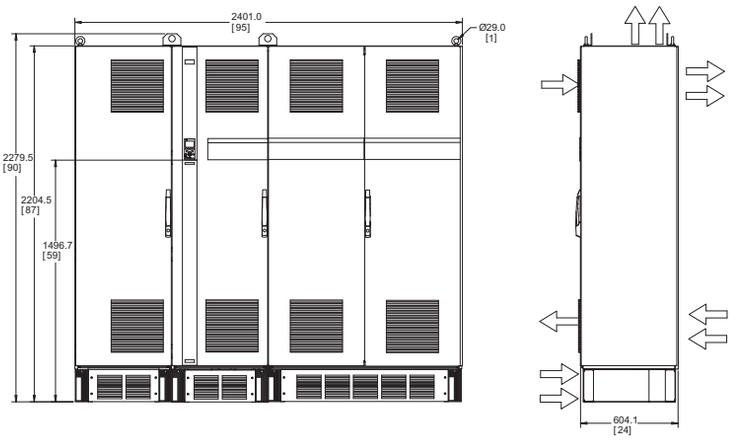

Unit Size 64

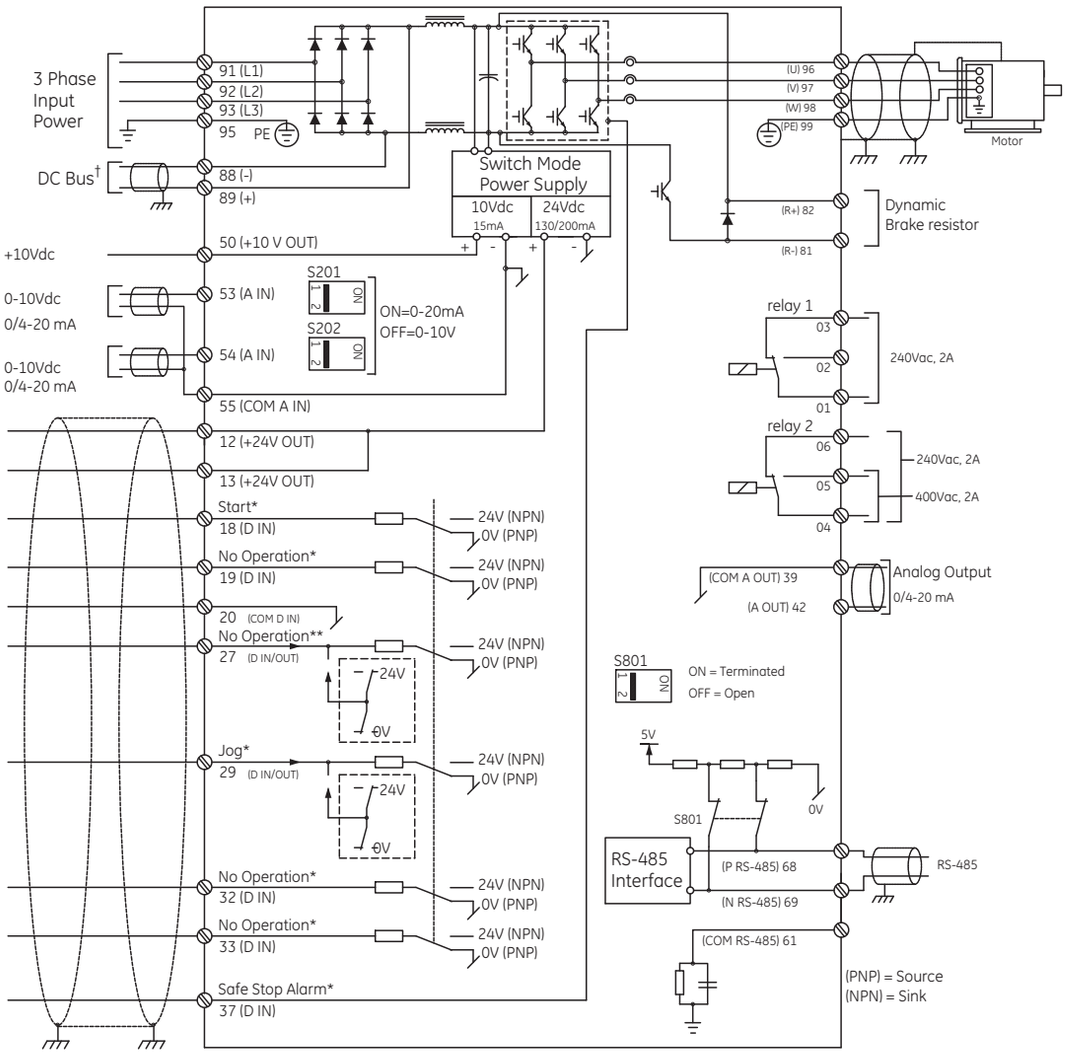

* Indicates default setting; see Parameter Group E-## to re-program.

** Indicates default setting for version 1.10 drives or higher. Prior versions are set to Coast Inverse, indicating that terminal #27 must be Logic "High" to enable the drive to run. See Parameter E-03 Terminal 27 Digital Input to re-program.

† These terminals are only available with optional factory installed brake chopper.

AF-650GP™ General Purpose Drive
Heavy Duty Efficiency, Watt Loss, Unit Size, Dimensions and Weights

230 Vac

HP Rating	Output Current	Efficiency at 5 kHz (%)	Efficiency at 4 kHz (%)	Efficiency at 3 kHz (%)	Watt Loss (W)	GE Unit Size	Drive Type	Height (in)	Width (in)	Depth (in)	Weight (lbs)
0.33	1.8	94			21	12	IP20 Chassis	14.7	3.5	8.7	10.8
0.5	2.4	94			29	12	IP20 Chassis	14.7	3.5	8.7	10.8
1	4.6	95			54	12	IP20 Chassis	14.7	3.5	8.7	10.8
2	7.5	96			82	12	IP20 Chassis	14.7	3.5	8.7	10.8
3	10.6	96			115	12	IP20 Chassis	14.7	3.5	8.7	10.8
5	16.7	96			185	13	IP20 Chassis	14.7	5.1	8.7	14.55
7.5	24.2		96.4		239	23	IP20 Chassis	16.5	6.5	10.31	26.5
10	30.8		95.9		371	23	IP20 Chassis	16.5	6.5	10.31	26.5
15	46.2		96.4		463	24	IP20 Chassis	23.43	9.06	9.53	51.8
20	59.4		96		621	24	IP20 Chassis	23.43	9.06	9.53	51.8
25	74.8			97	740	33	IP20 Chassis	24.8	12.13	13.15	77.2
30	88			97	874	33	IP20 Chassis	24.8	12.13	13.15	77.2
40	115			97	1143	34	IP20 Chassis	31.5	14.57	13.15	110.2
50	143			97	1400	34	IP20 Chassis	31.5	14.57	13.15	110.2

460 Vac

HP Rating	Output Current	Efficiency at 5 kHz (%)	Efficiency at 4 kHz (%)	Efficiency at 3 kHz (%)	Efficiency at 2 kHz (%)	Watt Loss (W)	GE Unit Size	Drive Type	Height (in)	Width (in)	Depth (in)	Weight (lbs)
0.5	1.2	93				35	12	IP20 Chassis	14.7	3.5	8.7	10.8
1	2.1	96				46	12	IP20 Chassis	14.7	3.5	8.7	10.8
2	3.4	97				62	12	IP20 Chassis	14.7	3.5	8.7	10.8
3	4.8	97				88	12	IP20 Chassis	14.7	3.5	8.7	10.8
5	8.2	97				124	12	IP20 Chassis	14.7	3.5	8.7	10.8
7.5	11	97				187	13	IP20 Chassis	14.7	5.1	8.7	14.55
10	14.5	97				255	13	IP20 Chassis	14.7	5.1	8.7	14.55
15	21		98			291	23	IP20 Chassis	16.5	6.5	10.31	26.5
20	27		98			379	23	IP20 Chassis	16.5	6.5	10.31	26.5
25	34		98			444	24	IP20 Chassis	23.43	9.06	9.53	51.8
30	40		98			547	24	IP20 Chassis	23.43	9.06	9.53	51.8
40	52			98		570	24	IP20 Chassis	23.43	9.06	9.53	51.8
50	65			98		697	33	IP20 Chassis	24.8	12.13	13.15	77.2
60	80			98		891	33	IP20 Chassis	24.8	12.13	13.15	77.2
75	105			98		1022	34	IP20 Chassis	31.5	14.57	13.15	110.2
100	130			99		1232	34	IP20 Chassis	31.5	14.57	13.15	110.2
125	160			98		2641	43	IP00 Chassis	39.3	16.1	14.7	200.6
150	190			98		2995	43	IP00 Chassis	39.3	16.1	14.7	200.6
200	240			98		3425	44	IP00 Chassis	50.3	16.1	14.7	304.2
250	302			98		3910	44	IP00 Chassis	50.3	16.1	14.7	304.2
300	361			98		4625	44	IP00 Chassis	50.3	16.1	14.7	304.2
350	443				98	5165	52	IP00 Chassis	59	23	19.5	611
450	540				98	6960	52	IP00 Chassis	59	23	19.5	611
500	590				98	7691	52	IP00 Chassis	59	23	19.5	611
550	678				98	8636	52	IP00 Chassis	59	23	19.5	611
600	730				98	9492	61	IP21/NEMA 1	86.8	55.1	23.9	2214
650	780				98	10631	61	IP21/NEMA 1	86.8	55.1	23.9	2214
750	890				98	11263	61	IP21/NEMA 1	86.8	55.1	23.9	2214
900	1050				98	13172	61	IP21/NEMA 1	86.8	55.1	23.9	2214
1000	1160				98	14967	62	IP21/NEMA1	86.8	71	23.9	2748
1200	1380				98	16392	62	IP21/NEMA1	86.8	71	23.9	2748

AF-650GP™ General Purpose Drive
Heavy Duty Efficiency, Watt Loss, Unit Size, Dimensions and Weights

575 Vac

HP Rating	Output Current	Efficiency at 5 kHz (%)	Efficiency at 3 kHz (%)	Efficiency at 2 kHz (%)	Watt Loss (W)	GE Unit Size	Drive Type	Height (in)	Width (in)	Depth (in)	Weight (lbs)
1	1.7	97			35	13	IP20 Chassis	14.7	5.1	8.7	14.55
2	2.7	97			65	13	IP20 Chassis	14.7	5.1	8.7	14.55
3	3.9	97			92	13	IP20 Chassis	14.7	5.1	8.7	14.55
5	6.1	97			145	13	IP20 Chassis	14.7	5.1	8.7	14.55
7.5	9	97			195	13	IP20 Chassis	14.7	5.1	8.7	14.55
10	11	97			261	13	IP20 Chassis	14.7	5.1	8.7	14.55
15	18		98		225	23	IP20 Chassis	16.5	6.5	10.31	26.5
20	22		98		285	23	IP20 Chassis	16.5	6.5	10.31	26.5
25	27		98		329	24	IP20 Chassis	23.43	9.06	9.53	51.8
30	34		98		700	24	IP20 Chassis	23.43	9.06	9.53	51.8
40	41		98		700	24	IP20 Chassis	23.43	9.06	9.53	51.8
50	52			98	850	33	IP20 Chassis	24.8	12.13	13.15	77.2
60	62			98	1100	33	IP20 Chassis	24.8	12.13	13.15	77.2
75	83			98	1400	34	IP20 Chassis	31.5	14.57	13.15	110.2
100	100			98	1500	34	IP20 Chassis	31.5	14.57	13.15	110.2

575–690 Vac

HP Rating	Output Current	Efficiency at 3 kHz (%)	Efficiency at 2 kHz (%)	Efficiency at 1.5 kHz (%)	Watt Loss (W)	GE Unit Size	Drive Type	Height (in)	Width (in)	Depth (in)	Weight (lbs)
15	13	98			228	22	IP21/NEMA 1	25.6	9.5	10.3	59.5
20	18	98			285	22	IP21/NEMA 1	25.6	9.5	10.3	59.5
25	22	98			335	22	IP21/NEMA 1	25.6	9.5	10.3	59.5
30	27	98			375	22	IP21/NEMA 1	25.6	9.5	10.3	59.5
40	34	98			480	32	IP21/NEMA 1	30.3	14.6	13.2	143.3
50	41	98			592	32	IP21/NEMA 1	30.3	14.6	13.2	143.3
60	51	98			720	32	IP21/NEMA 1	30.3	14.6	13.2	143.3
75	62	98			880	32	IP21/NEMA 1	30.3	14.6	13.2	143.3
100	83	98			1800	32	IP21/NEMA 1	30.3	14.6	13.2	143.3
125	108		98		2264	43	IP00 Chassis	39.3	16.1	14.7	180.8
150	131		98		2664	43	IP00 Chassis	39.3	16.1	14.7	180.8
200	155		98		2953	43	IP00 Chassis	39.3	16.1	14.7	200.6
250	192		98		3451	44	IP00 Chassis	50.3	16.1	14.7	246.9
300	242		98		4275	44	IP00 Chassis	50.3	16.1	14.7	271.2
350	290		98		4875	44	IP00 Chassis	50.3	16.1	14.7	304.2
400	344			98	5185	44	IP00 Chassis	50.3	16.1	14.7	332.9
500	380			98	5385	52	IP00 Chassis	59	23	19.5	487.2
600	410			98	5818	52	IP00 Chassis	59	23	19.5	487.2
650	500			98	7671	52	IP00 Chassis	59	23	19.5	520.3
750	570			98	8715	52	IP00 Chassis	59	23	19.5	610.7
900	630	98			9674	61	IP21/NEMA 1	86.8	55.1	23.9	2213.4
1000	730	98			10965	61	IP21/NEMA 1	86.8	55.1	23.9	2213.4
1150	850	98			12890	61	IP21/NEMA 1	86.8	55.1	23.9	2213.4
1250	945	98			14457	62	IP21/NEMA 1	86.8	71	23.9	2746.9
1350	1060	98			15899	62	IP21/NEMA 1	86.8	71	23.9	2746.9

AF-650GP™ General Purpose Drive
Dynamic Braking Resistors

Please note that the AF-650 General Purpose drives must be ordered with the Brake Chopper factory option in order to use the Dynamic Braking Resistors.

230 Vac

			Repetitive Braking Torque Duty – 10%						Repetitive Braking Torque Duty – 40%						Case Style Resistors						
Nominal Applied Motor HP	Nominal Applied Motor kW	Max. Braking Torque (%)	Qty.	(kW)	Ohms	Cont. Max Breaking Time(s)	Product Number	List Price GO-5AC	Qty.	(kW)	Ohms	Cont. Max Breaking Time(s)	Product Number	List Price GO-5AC	Qty.	(kW)	Ohms	Cont. Max Breaking Time(s)	Duty Cycle (%)	Product Number	List Price GO-5AC
0.33	0.25	160	1	0.095	425	12	DB2101TBNC	**$300.00**	1	0.43	425	120	DB2401TBNC	**$450.00**	1	0.1	430	48	40	DB2601FP	**$270.00**
0.5	0.37	160	1	0.25	310	12	DB2102TBNC	**$300.00**	1	0.80	310	120	DB2402TBNC	**$450.00**	1	0.2	310	66	55	DB2602FP	**$270.00**
1	0.75	160	1	0.065	145	12	DB2103TBNC	**$300.00**	1	0.26	145	120	DB2403TBNC	**$450.00**	1	0.2	150	32	27	DB2603FP	**$270.00**
2	1.5	160	1	0.25	65	12	DB2104TBNC	**$400.00**	1	0.80	65	120	DB2404TBNC	**$600.00**	1	0.2	72	17	14	DB2604FP	**$360.00**
3	2.2	160	1	0.285	50	12	DB2105TBNC	**$400.00**	1	1.00	50	120	DB2405TBNC	**$600.00**	2	0.2	50	12	10	DB2605FP	**$360.00**
5	3.7	160	1	0.8	25	12	DB2106TBNC	**$450.00**	1	3.00	25	120	DB2406TBNC	**$675.00**	2	0.2	60	13	11	DB2606FP	**$405.00**
7.5	5.5	158	1	1	20	12	DB2107TBNC	**$530.00**	1	–	–	–	–	–	–	–	–	–	–	–	–
10	7.5	153	1	2	15	12	DB2108TBNC	**$650.00**	1	–	–	–	–	–	–	–	–	–	–	–	–
15	11	154	1	2.8	10	12	DB2109TBNC	**$1200.00**	1	–	–	–	–	–	–	–	–	–	–	–	–
20	15	150	1	4	7	12	DB2110TBNC	**$1310.00**	1	–	–	–	–	–	–	–	–	–	–	–	–
25	18.5	150	1	4.8	6	12	DB2111TBNC	**$1485.00**	1	–	–	–	–	–	–	–	–	–	–	–	–
30	22	150	1	6	4.7	30	DB2112TBNC	**$1635.00**	1	–	–	–	–	–	–	–	–	–	–	–	–
40	30	150	1	8	3.3	30	DB2113TBNC	**$1663.00**	1	–	–	–	–	–	–	–	–	–	–	–	–
50	37	150	1	10	2.7	30	DB2114TBNC	**$2204.00**	1	–	–	–	–	–	–	–	–	–	–	–	–

460 Vac

			Repetitive Braking Torque Duty – 10%						Repetitive Braking Torque Duty – 40%						Case Style Resistors						
Nominal Applied Motor HP	Nominal Applied Motor kW	Max. Braking Torque (%)	Qty.	(kW)	Ohms	Cont. Max Breaking Time(s)	Product Number	List Price GO-5AC	Qty.	(kW)	Ohms	Cont. Max Breaking Time(s)	Product Number	List Price GO-5AC	Qty.	(kW)	Ohms	Cont. Max Breaking Time(s)	Duty Cycle (%)	Product Number	List Price GO-5AC
0.5	0.37	160	1	0.065	620	12	DB4101TBNC	**$450.00**	1	0.26	620	120	DB4401TBNC	**$675.00**	1	100	830	36	30	DB4601FP	**$405.00**
1	0.75	160	1	0.065	620	12	DB4102TBNC	**$450.00**	1	0.26	620	120	DB4402TBNC	**$675.00**	1	200	620	32	27	DB4602FP	**$405.00**
2	1.5	160	1	0.25	310	12	DB4103TBNC	**$525.00**	1	0.80	310	120	DB4403TBNC	**$788.00**	1	200	310	17	14	DB4603FP	**$473.00**
3	2.2	160	1	0.29	210	12	DB4104TBNC	**$525.00**	1	1.35	210	120	DB4404TBNC	**$788.00**	1	200	210	12	10	DB4604FP	**$473.00**
5	4	160	1	0.60	110	12	DB4105TBNC	**$600.00**	1	2	110	120	DB4405TBNC	**$900.00**	2	200	240	12	10	DB4605FP	**$540.00**
7.5	5.5	160	1	0.85	80	12	DB4106TBNC	**$850.00**	1	3	80	120	DB4406TBNC	**$1275.00**	2	200	160	10	8	DB4606FP	**$765.00**
10	7.5	160	1	1	65	12	DB4107TBNC	**$950.00**	1	5	65	120	DB4407TBNC	**$1425.00**	2	200	130	7	6	DB4607FP	**$855.00**
15	11	160	1	2	40	12	DB4108TBNC	**$1050.00**	1	5	40	120	DB4408TBNC	**$1575.00**	2	240	80	6	5	DB4608FP	**$945.00**
20	15	160	1	3	30	12	DB4109TBNC	**$1100.00**	1	9	30	120	DB4409TBNC	**$1650.00**	2	240	72	5	4	DB4609FP	**$990.00**
25	18.5	160	1	4	25	12	DB4110TBNC	**$1200.00**	1	13	25	120	DB4410TBNC	**$1800.00**	–	–	–	–	–	–	–
30	22	160	1	4	20	12	DB4111TBNC	**$1300.00**	1	13	20	120	DB4411TBNC	**$1950.00**	–	–	–	–	–	–	–
40	30	150	1	5	15	12	DB4112TBNC	**$1750.00**	1	16	15	120	DB4412TBNC	**$2625.00**	–	–	–	–	–	–	–
50	37	150	1	6	12	12	DB4113TBNC	**$1900.00**	1	19	12	120	DB4413TBNC	**$2850.00**	–	–	–	–	–	–	–
60	45	150	1	15	9.8	12	DB4114TBNC	**$2150.00**	1	38	9.8	120	DB4414TBNC	**$3225.00**	–	–	–	–	–	–	–
75	55	150	1	13	7.3	12	DB4115TBNC	**$2355.00**	1	38	7.3	120	DB4415TBNC	**$3533.00**	–	–	–	–	–	–	–
100	75	150	1	15	4.7	12	DB4116TBNC	**$3800.00**	1	45	4.7	120	DB4416TBNC	**$5700.00**	–	–	–	–	–	–	–
125	90	150	1	22	3.8	30	DB4117TBNC	**$4300.00**	2	75	3.8	600	DB4417TBNC	**$6450.00**	–	–	–	–	–	–	–
150	110	150	1	27	3.2	30	DB4118TBNC	**$6450.00**	2	90	3.2	600	DB4418TBNC	**$9675.00**	–	–	–	–	–	–	–
200	132	150	1	32	2.6	30	DB4119TBNC	**$7600.00**	2	112	2.6	600	DB4419TBNC	**$11175.00**	–	–	–	–	–	–	–
250	160	150	1	39	2.1	30	DB4120TBNC	**$8600.00**	2	135	2.1	600–	DB4420TBNC	**$12675.00**	–	–	–	–	–	–	–
300	200	150	2	56	3.3	30	DB4121TBNC	**$9420.00**	–	–	–	–	–	–	–	–	–	–	–	–	–
350	250	150	2	72	2.6	30	DB4122TBNC	**$14050.00**	–	–	–	–	–	–	–	–	–	–	–	–	–
450	355	150	2	100	2.1	30	DB4123TBNC	**$16200.00**	–	–	–	–	–	–	–	–	–	–	–	–	–
550	400	150	4	144	1.3	30	DB4124TBNC	**$17000.00**	Consult Factory												
600	450	150	4	144	1.3	30	DB4125TBNC	**$18500.00**													
650	500	150	4	144	1.3	30	DB4126TBNC	**$20000.00**													
750	560	150	4	144	1.3	30	DB4127TBNC	**$21500.00**													
900	630	150	4	144	1.3	30	DB4128TBNC	**$23000.00**													
1000	710	150	4	144	1.3	30	DB4129TBNC	**$24500.00**													
1200	800	150	4	144	1.3	30	DB4130TBNC	**$26000.00**													

AF-650GP™ General Purpose Drive
Dynamic Braking Resistors

575 Vac

			Repetitive Braking Torque Duty – 10%						Repetitive Braking Torque Duty – 40%					
Nominal Applied Motor HP	Nominal Applied Motor kW	Max. Braking Torque (%)	Qty.	(kW)	Ohms	Cont. Max Breaking Time(s)	Product Number	List Price GO-5AC	Qty.	(kW)	Ohms	Cont. Max Breaking Time(s)	Product Number	List Price GO-5AC
1	0.75	160	1	0.065	620	12	DB5101TBNC	**$450.00**	1	0.26	620	120	DB5401TBNC	**$675.00**
2	1.5	160	1	0.10	425	12	DB5102TBNC	**$450.00**	1	1.00	425	120	DB5402TBNC	**$675.00**
3	2.2	160	1	0.25	310	12	DB5103TBNC	**$525.00**	1	1.60	310	120	DB5403TBNC	**$788.00**
5	4	160	1	0.43	150	12	DB5104TBNC	**$525.00**	1	4	150	120	DB5404TBNC	**$788.00**
7.5	5.5	160	1	0.60	110	12	DB5105TBNC	**$600.00**	1	5	110	120	DB5405TBNC	**$900.00**
10	7.5	160	1	1	80	12	DB5106TBNC	**$850.00**	1	6	80	120	DB5406TBNC	**$1275.00**
15	11	160	1	2	40	12	DB5107TBNC	**$950.00**	1	11	40	120	DB5407TBNC	**$1425.00**
20	15	160	1	2	40	12	DB5108TBNC	**$1050.00**	1	11	40	120	DB5408TBNC	**$1575.00**
25	18.5	160	1	3	30	12	DB5109TBNC	**$1100.00**	1	18	30	120	DB5409TBNC	**$1650.00**
30	22	160	1	4	25	12	DB5110TBNC	**$1200.00**	1	23	25	120	DB5410TBNC	**$1800.00**
40	30	150	1	4	20	12	DB5111TBNC	**$1300.00**	1	25	20	120	DB5411TBNC	**$1950.00**
50	37	150	1	5	15	12	DB5112TBNC	**$1750.00**	1	32	15	120	DB5412TBNC	**$2625.00**
60	45	150	1	6	12	12	DB5113TBNC	**$1900.00**	1	40	12	120	DB5413TBNC	**$2850.00**
75	55	150	1	15	9.8	12	DB5114TBNC	**$2150.00**	1	62	9.8	120	DB5414TBNC	**$3225.00**
100	75	150	1	13	7.3	12	DB5115TBNC	**$2355.00**	1	72	7.3	120	DB5415TBNC	**$3533.00**

690 Vac

			Repetitive Braking Torque Duty – 10%						Repetitive Braking Torque Duty – 40%					
Nominal Applied Motor HP	Nominal Applied Motor kW	Max. Braking Torque (%)	Qty.	(kW)	Ohms	Cont. Max Breaking Time(s)	Product Number	List Price GO-5AC	Qty.	(kW)	Ohms	Cont. Max Breaking Time(s)	Product Number	List Price GO-5AC
125	90	160	1	126	9.8	60	DB6101TBNC	**$6010.00**	1	77	9.8	120	DB6401TBNC	**$6010.00**
150	110	160	1	153	7.3	60	DB6102TBNC	**$6800.00**	1	93	7.3	120	DB6402TBNC	**$6800.00**
200	132	160	1	185	4.7	60	DB6103TBNC	**$7910.00**	1	113	4.7	120	DB6403TBNC	**$7910.00**
250	160	160	1	224	4.7	60	DB6104TBNC	**$9925.00**	1	137	4.7	120	DB6404TBNC	**$9925.00**
300	200	160	2	147	3.8	60	DB6105TBNC	**$11425.00**	2	90	3.8	120	DB6405TBNC	**$11425.00**
350	250	160	2	173	2.6	60	DB6106TBNC	**$12925.00**	2	106	2.6	120	DB6406TBNC	**$12925.00**
400	315	160	2	212	2.6	60	DB6107TBNC	**$14425.00**	2	130	2.6	120	DB6407TBNC	**$14425.00**
500	355	160	-	-	-	-	-	-	-	-	-	-	-	-
550	355	160	-	-	-	-	-	-	-	-	-	-	-	-
650	500	160	-	-	-	-	-	-	-	-	-	-	-	-
750	560	150	-	-	-	-	-	-	-	-	-	-	-	-
900	630	150	-	-	-	-	-	-	-	-	-	-	-	-
1000	710	150	-	-	-	-	-	-	-	-	-	-	-	-
1150	800	150	-	-	-	-	-	-	-	-	-	-	-	-
1250	900	150	-	-	-	-	-	-	-	-	-	-	-	-
1350	1000	150	-	-	-	-	-	-	-	-	-	-	-	-

AF-650GP™ General Purpose Drive Standard Specifications

Environmental Conditions

Enclosures	IP20 Chassis, IP00 Chassis, IP21/NEMA 1, IP55/NEMA 12, IP54/NEMA 12, IP66/NEMA 4
Installation Location	Do not install in locations where product could be exposed to dust, corrosive gas, inflammable gas, oil mist, vapor, water drops or direct sunlight. There must be no salt in the atmosphere. Condensation must not be caused by sudden changes in temperature. For use at altitudes of 3280 ft. (1000M) or less without derating.
Storage Temperature	-25° to 65°C
Ambient Temperature	-10° to +50°C (24 hour average max of 45°C)
Ambient Humidity	5 to 95% RH (non-condensing)
Vibration	1.0g
Cooling Method	Fan Cooled all ratings. Fan Control Auto, 50% level, 75% level, 100% level adjustable

Standards

Approvals	CE, UL, cUL, and C-Tick Suitable for use on a circuit capable of delivering not more than 100,000 rms symmetrical amperes for 230V and 460V.

Input Power Supply

Rated Input AC Voltage	200-240 Vac, 3-phase, 50-60 Hz, +/- 10% V 380-500 Vac, 3-phase, 50-60 Hz, +/- 10% V 525-600 Vac, 3-phase, 50-60Hz, +/- 10% V 525-690 Vac, 3-phase, 50-60 Hz, +/- 10% V
Maximum Voltage Imbalance	3% of rated supply voltage
True Power Factor	> 0.9 nominal at rated load
Displacement Power Factor	> 0.98
Switching on input power supply	Maximum twice/minute up to 10HP, Maximum once/minute above 10HP
Environment according to EN60664-1	Overvoltage category III/pollution degree 2

Output

Rated Output Voltage	0-100% of supply voltage
Output Frequency	0-1000 Hz; 0-800Hz for 460V above 100HP and 525/600/690 V above 100HP
Switching on output	Unlimited
Accel/Decel Times	0.01-3600 seconds
Control Method	Sinusoidal PWM Control (V/Hz, Avd. Vector Control, Sensorless Vector, and Flux Vector with motor feedback)

Control

Starting Torque	160% starting torque for 1 minute (constant torque), 110% starting torque for 1 minute (variable torque)
Carrier Frequency (Motor Noise)	Selectable - 1, 1.5, 2, 2.5, 3, 3.5, 4, 5, 6, 7, 8, 10, 12, 14, 16 kHz
Torque Boost	Selectable by up to 5 individual V/Hz settings in V/Hz Mode or by 0 - 300% setting of Torque Boost parameter in Adv. Vector Mode
Acceleration/Deceleration Time	0.01-3600 seconds (4 acceleration and deceleration times are selectable via digital inputs. Acceleration and deceleration patterns can be selected from linear or S-curve)
Data Protection	Password Protection for Quick Menu or Main Menu, 0-9999.
Pattern Operation	Settings via Built-In Logic Controller Sequencer
Jump Frequency Control	4 jump (or skip) frequencies via parameter set to avoid mechanical vibration
Slip Compensation	Maintains motor at constant speed with load fluctuations
Torque Limit Control	Output torque can be controlled within a range of 0.0 to 160% (0.1 and steps)
8 Preset Speeds	8 programmable preset speeds selectable by 3 digital inputs
Trim Reference Setting	Available for speed reference offset via potentiometer, voltage input, or current input
DC Injection Braking	Starting frequency: 0.0-1000 Hz, 0-800Hz for 460V above 100HP and 525-690 V above 50HP Braking time: 0.0-60.0 seconds Braking level: 0-100% of rated current
Jogging Operation	Operation via On key or digital input (Fwd or Rev)
Auto-Restart After Power Failure	Restarts the drive without stopping after instantaneous power failure
Energy Savings	Controls output voltage to minimize motor loss during constant speed operation
Start Mode Function	This functionality smoothly catches a spinning motor

Logic Controller (LC) Sequencer

Logic Controller Events	Up to 37 types of Programmable Events
Comparators	Array of 6 Comparators
Timers	Array of 8 Timers, adjustable from 0.0 to 3600 sec
Logic Rules	Array of 6 Boolean Logic Rules
Logic Controller States	Array of 20 Logic Controller Action States

Process Controller (PID)

Process CL Feedback Select	Up to 2 references. Selectable - No function, Motor Feedback, Separate Encoder, Encoder Option Module, or Resolver Option Module
Process PID Control	Normal or Inverse
Process PID Anti Windup	Disabled or enabled
Process PID Start Speed	0.0-200 Hz
Process PID Proportional Gain	0.00-10.00
Process PID Integral Time	0.1 - 10000.0 ms
Process PID Differential Time	0.0 - 10 s
Process PID Differential Gain	1.0-50.00
Process PID Feed Forward Factor	0-500%
On Reference Bandwidth	0-200%

Operation

Operation Method	Keypad operation: Hand, Off, Auto Digital Input: Programmable for Start/Stop, Forward/Reverse, Jog Timer operation: Stop after predetermined time frame Built-in RS-485 Modbus RTU USB Port for programming drive with optional PC Software
Frequency Reference Signal	Left or Right Arrow buttons on keypad in Manual Mode Speed Potentiometer: 0 to +10 Vdc, 10 to 0 Vdc 0-10Vdc analog input 0/4-20ma analog input
References	Up to 3 Input References can be selected from Analog Input #1 or #2, Frequency Input #1 or #2, Network, or Potentiometer
Input Signals	6 - Digital Inputs, 24 Vdc PNP or NPN 1 - Safe Stop Digital Input suitable for category 3 installations to meet EN-954-1 2 - Pulse Inputs rated to 110kHz or 1 - Pulse Input and 1 - Encoder Input 24 Vdc rated to 4096 PPR 2 - Analog Inputs -10 to +10V scalable or 0/4 to 20 mA scalable Digital Input Settings: No Operation Reset after drive trip or alarm Drive at stop with no holding current Quick Stop according to Quick Stop Decel Time 1 Stop on input going low Start Maintained Start arfter signal applied for Minimum of 2ms Reversing Start Reverse Enable Start Forward only Enable Start Reverse only Jog Multi-Step Frequency selection (1 to 8 Steps) Hold Drive Frequency Hold Reference Speed Up; activated by Hold Drive Frequency or Hold Reference Slow Down; activated by Hold Drive Frequency or Hold Reference Drive Parameter Setup Select 1-4 Precise Start or Stop; Activated when drive parameter precise start or stop function is selected Catch Up or Slow Down; Activated by signal to add to or subtract from input reference to control speed Pulse Input selectable from 100 - 110000Hz Accel / Decel Time select. Set Input to Accel / Decel Times 1 to 4 Digital Potentiometer Input Increase or Decrease Mechanical Brake Feedback

AF-650GP™ General Purpose Drive
Standard Specifications

Operation (continued)

Output Signals	2 - Digital Outputs 24 Vdc (Digital Outputs are used in place of 2 of the Digital Inputs) 2 - Form C Relays rated to 2A at 240 Vac 1 - Analog Output 0/4 to 20mA Relay Output Settings: No Operation Control Ready Drive Ready Drive Ready in Remote Standby No Drive Warnings Drive Running Drive Running No Drive Warnings Drive Running on Remote Alarm Alarm or Warning At Torque Limit Out of Current Range Below Current Above Current Out of Speed Range Below Speed Above Speed Out of Feedback Range Below Feedback Above Feedback Thermal Overload Warning Reverse Bus OK Torque Limit and Stopped Brake and no Warning Brake Ready and No Faults Brake Chopper Fault External Interlock Out of External Reference Range Below External Reference Above External Reference Fieldbus Controlling Drive No Alarm Running in Reverse Local Mode Active Remote Mode Active Start Command Active Hand Mode Active Auto Mode Active
Protective Functions	Line Phase Loss DC Overvoltage DC Undervoltage Drive Overload Motor Overtemperature Motor Thermistor Overtemperature Torque Limit Overcurrent Ground Fault Short Circuit Control Word Timeout Brake Resistor Short-Circuited Brake Chopper Short-Circuited Brake Check DC Link Voltage High DC Link Voltage Low Internal Fan Fault External Fan Fault Power Board Overtemperature Missing U Phase Missing V Phase Missing W Phase Internal Fault Control Voltage Fault Auto Tune Check - Wrong Motor Parameters Auto Tune Low Inom - Motor current is too low Current Limit Mechanical Brake Low Drive Initialized to Default Value Keypad Error No Motor Soft Charge Fault Auto Tuning Fault Serial Comms Bus Fault Hardware Mismatch Speed Limit

Keypad

Keypad Features	LCD Display with 6 Alpha-numeric lines. Multi-Language Support Hot Pluggable, Remote Mount Option, and CopyCat Feature, IP65 rating when remote mounted on enclosure LED's - Green - drive is on, Yellow - indicates a warning, Red - indicates an alarm, Amber - Indicates active Menu keys and H-O-A keys
Keypad Keys	Status - shows status of drive Quick Menu - Enters Quick Start, Parameter Data Check, or Trending Modes Main Menu - Used for programming all drive parameters Alarm Log - Used to display Alarm list Back - Reverts to previous step or layer in parameter structure Cancel - Used to cancel last change or command Info - Displays information about a command, parameter, or function in any display. Hand/Off/Auto - Used to control drive locally or put drive in remote mode Reset - Used to reset Warnings or Alarms
Password	2 Level Password Protection
Alternate Motor Parameters	Up to 4 Separate complete parameter set-ups are available
Graphical Trending	Trend Speed, Power, Frequency or any value programmed in status display

RS485 Modbus RTU Serial Communications

Physical Level:	EIA/RS485
Transmission Distance:	1640 ft (500m)
Node Address:	32
Transmission Speed:	2400, 4800, 9600, 19200, 38400,or 115200 (bits/s)
Transmission Mode:	Half Duplex
Transmission Protocol	Modbus RTU
Character Code:	Binary
Character Length:	8 Bits
Error Check:	CRC

Mounting Clearance

All AF-650GP™ drives can be mounted Side-by-Side without spacing.
For all drives rated 100HP or below allow 3.4 inches (100mm) free space above and below.
For all drives rated 125HP and above allow 8.9 inches (225mm) free space above and below.

AF-650GP™ General Purpose Drive Replacement Parts

IP 20 - 230 Vac, 3-Phase, 50/60Hz Input
IP 55/66 - 230 Vac, 3-Phase, 50/60Hz Input

Product Number	List Price GO-5RP	Description	Unit Size	Rating	Drive Hp and Quantity Per Drive													
					1/3	1/2	1	2	3	5	7.5	10	15	20	25	30	40	50
Main Control Card																		
6KAF61109	**$950.00**	Control Card	-	-	1	1	1	1	1	1	1	1	1	1	1	1	1	1
Keypad																		
KYPDACGP1	**$500.00**	Replacement Graphical Keypad	-	-	1	1	1	1	1	1	1	1	1	1	1	1	1	1
6KAF61007	**$45.00**	Frame w/o option A or B	12/13/23	-	1	1	1	1	1	1	1	1						
6KAF61008	**$60.00**	Frame w option A or B	12/13/23	-	1	1	1	1	1	1	1	1						
6KAF60284	**$75.00**	Frame	24/33/34	-									1	1	1	1	1	1
6KAF63414	**$40.00**	Frame	15/21/22/31/32	-	1	1	1	1	1	1	1	1	1	1	1	1	1	1
6KAF61011	**$40.00**	Terminal cover w/o option A or B	12/13	-	1	1	1	1	1	1								
6KAF61012	**$40.00**	Terminal cover w option A or B	12/13	-	1	1	1	1	1	1								
6KAF61411	**$65.00**	Terminal cover	23	-							1	1						
6KAF61410	**$95.00**	Terminal cover	23	-							1	1						
Power Card																		
6KAF61802	**$3830.00**	Power Card	21	-							1							
6KAF61803	**$4285.00**	Power Card	21	-								1						
6KAF61805	**$4835.00**	Power Card	22	-									1					
6KAF61807	**$1550.00**	Power Card	31	-										1				
6KAF61808	**$1550.00**	Power Card	31	-											1			
6KAF61809	**$1550.00**	Power Card	31	-												1		
6KAF61810	**$1735.00**	Power Card	32	-													1	
6KAF61811	**$1735.00**	Power Card	32	-														1
6KAF61902	**$3830.00**	Power Card	23	-							1							
6KAF61903	**$4285.00**	Power Card	23	-								1						
6KAF61906	**$4835.00**	Power Card	24	-									1					
6KAF61907	**$5020.00**	Power Card	24	-										1				
6KAF61916	**$1825.00**	Power Card	33	-											1			
6KAF61917	**$1825.00**	Power Card	33	-												1		
6KAF61918	**$1920.00**	Power Card	34	-													1	
6KAF61919	**$1920.00**	Power Card	34	-														1
6KAF61806	**$2010.00**	Switch Mode Power Supply	22	-									1					
Inverter IGBTs																		
6KAF61884	**$1510.00**	Dual IGBT Module	31/33	150A										3	3			
6KAF61885	**$1895.00**	Dual IGBT Module	31/33	200A												3		
6KAF61886	**$2600.00**	Dual IGBT Module	32/34	300A													3	3
Brake IGBT																		
6KAF61884	**$1510.00**	Dual IGBT Module	31/33	150A										1	1	1		
6KAF61400	**$2105.00**	Dual IGBT Module	32/34	200A													1	
6KAF61886	**$2595.00**	Dual IGBT Module	32/34	300A														1
Rectifiers																		
6KAF61887	**$820.00**	Thyristor Module	31/33	180A										3	3	3		
6KAF61888	**$1130.00**	Thyristor Module	32/34	240A													3	3
RFI Filters																		
6KAF63378	**$680.00**	RFI Filter (class A2)	21	-							1	1						
6KAF63381	**$685.00**	RFI Filter (class A2)	22	-									1					
6KAF63427	**$40.00**	RFI Filter (class A2)	31	-										1	1	1		
6KAF63377	**$1235.00**	RFI Filter (class A1/B)	21	-							1	1						
6KAF63380	**$1495.00**	RFI Filter (class A1/B)	22	-									1					
6KAF63425	**$4265.00**	RFI Filter (class A1/B)	31	-										1	1	1		
6KAF63422	**$4750.00**	RFI Filter (class A1/B)	32	-													1	1
6KAF61412	**$1325.00**	RFI Filter (class A1/B)	23	-							1	1						
6KAF61416	**$1535.00**	RFI Filter (class A1/B)	24	-									1	1				
6KAF61419	**$2565.00**	RFI Filter (class A1/B)	33	-											1	1		
6KAF61420	**$3185.00**	RFI Filter (class A1/B)	34	-													1	1
Current Transducers																		
6KAF61896	**$1580.00**	Current Transducer Card	31/33	-										1	1	1		
6KAF61895	**$1590.00**	Current Transducer Card	32/34	-													1	1
DC Link																		
6KAF65160	**$910.00**	DC Capacitors	31	3700uF										2				
6KAF65159	**$1050.00**	DC Capacitors	31	4500uF											2			
6KAF65158	**$1275.00**	DC Capacitors	31	5300uF												2		
6KAF65157	**$825.00**	DC Capacitors	32	3700uF													2	
6KAF65156	**$1030.00**	DC Capacitors	32	4500uF														2
6KAF61423	**$1440.00**	DC Capacitors	33/34	4500uF											2	2	2	2
6KAF61060	**$1200.00**	DC Link Reactors	21	780mH							1							
6KAF61062	**$1260.00**	DC Link Reactors	22	490mH								1						
6KAF61063	**$1385.00**	DC Link Reactors	22	410mH									1					
6KAF61035	**$2205.00**	DC Link Reactors	31	300mH										1				
6KAF61036	**$2630.00**	DC Link Reactors	31	260mH											1			
6KAF61037	**$2960.00**	DC Link Reactors	31	200mH												1		
6KAF61038	**$3535.00**	DC Link Reactors	32	170mH													1	
6KAF61039	**$4090.00**	DC Link Reactors	32	100mH														1
6KAF61950	**$1355.00**	DC Link Assembly	24	-									1					
6KAF61951	**$1600.00**	DC Link Assembly	24	-										1				

AF-650GP™ General Purpose Drive Replacement Parts

IP 20 - 230 Vac, 3-Phase, 50/60Hz Input (continued)
IP 55/66 - 230 Vac, 3-Phase, 50/60Hz Input (continued)

Product Number	List Price GO-5RP	Description	Unit Size	Rating	Drive Hp and Quantity Per Drive													
					1/3	1/2	1	2	3	5	7.5	10	15	20	25	30	40	50
Fans																		
6KAF61009	**$160.00**	Fan Assembly	12	-	1	1	1	1	1									
6KAF61010	**$160.00**	Fan Assembly	13	-						1								
6KAF61017	**$295.00**	Fan Assembly	15	-	1	1	1	1	1	1								
6KAF63563	**$270.00**	External Fan (IP20)	23	12W							1	1						
6KAF63699	**$250.00**	External Fan (IP20)	24	12W									1					
6KAF64292	**$250.00**	External Fan (IP20)	33	12W										2	2	2		
6KAF64294	**$355.00**	External Fan (IP20)	34	18W													2	2
6KAF63407	**$455.00**	External Fan (IP55)	21	22W							1	1						
6KAF63406	**$640.00**	External Fan (IP55)	22	22W									1					
6KAF63865	**$645.00**	External Fan (IP55)	31	26W										1	1	1		
6KAF63867	**$1235.00**	External Fan (IP55)	32	22W													1	1
6KAF63440	**$100.00**	Internal Fan	21/23	5.8W							1	1						
6KAF63441	**$100.00**	Internal Fan	22/24	5.8W									1	1				
6KAF63923	**$110.00**	Internal Fan	31/32/33/34	5.8W										1	1	1	1	1
Accessory Bags																		
6KAF61022	**$275.00**	Connectors Accessory Bag	12/13	-	1	1	1	1	1	1								
6KAF61023	**$240.00**	Connectors Accessory Bag	15	-	1	1	1	1	1	1								
6KAF62060	**$120.00**	Connectors Accessory Bag	21	-							1	1						
6KAF62061	**$125.00**	Connectors Accessory Bag	22	-									1					
6KAF60980	**$140.00**	Connectors Accessory Bag	23	-							1	1						
6KAF61300	**$270.00**	Connectors Accessory Bag	24	-									1	1				
6KAF60046	**$200.00**	Connectors Accessory Bag	31	-										1	1	1		
6KAF60047	**$210.00**	Connectors Accessory Bag	32	-													1	1
6KAF60981	**$225.00**	Connectors Accessory Bag	33	-											1	1		
6KAF60982	**$270.00**	Connectors Accessory Bag	34	-													1	
6KAF60983	**$270.00**	Connectors Accessory Bag	34	-														1
6KAF60633	**$55.00**	Brake and Load Sharing Connectors Bag	12/13/15	-	1	1	1	1	1	1								

IP 20 - 460 Vac, 3-Phase, 50/60Hz Input
IP 55/66 - 460 Vac, 3-Phase, 50/60Hz Input

Product Number	List Price GO-5RP	Description	Unit Size	Rating	Drive Hp and Quantity Per Drive															
					1/2	1	2	3	5	7.5	10	15	20	25	30	40	50	60	75	100
Main Control Card																				
6KAF61109	**$950.00**	Control Card	-	-	1	1	1	1	1	1	1	1	1	1	1	1	1	1	1	1
Keypad																				
KYPDACGP1	**$500.00**	Replacement Graphical Keypad	-	-	1	1	1	1	1	1	1	1	1	1	1	1	1	1	1	1
6KAF61007	**$45.00**	Frame w/o option A or B	12/13/23	-	1	1	1	1	1	1	1	1	1							
6KAF61008	**$60.00**	Frame w option A or B	12/13/23	-	1	1	1	1	1	1	1	1	1							
6KAF60284	**$75.00**	Frame	24/33/34	-										1	1	1	1	1	1	1
6KAF63414	**$40.00**	Frame	15/21/22/31/32	-	1	1	1	1	1	1	1	1	1	1	1	1	1	1	1	1
6KAF61011	**$40.00**	Terminal cover w/o option A or B	12/13	-	1	1	1	1	1	1	1									
6KAF61012	**$40.00**	Terminal cover w option A or B	12/13	-	1	1	1	1	1	1	1									
6KAF61411	**$65.00**	Terminal cover	23	-								1	1							
6KAF61410	**$95.00**	Terminal cover	23	-								1	1							
Power Card																				
6KAF61841	**$3830.00**	Power Card	21	-								1								
6KAF61842	**$4285.00**	Power Card	21	-									1							
6KAF61823	**$4380.00**	Power Card	22	-										1						
6KAF61825	**$4835.00**	Power Card	22	-											1					
6KAF61845	**$1550.00**	Power Card	31	-												1				
6KAF61846	**$1550.00**	Power Card	31	-													1			
6KAF61847	**$1550.00**	Power Card	31	-														1		
6KAF61848	**$1735.00**	Power Card	32	-															1	
6KAF61849	**$1735.00**	Power Card	32	-																1
6KAF61941	**$3830.00**	Power Card	23	-								1								
6KAF61942	**$4285.00**	Power Card	23	-									1							
6KAF61943	**$4380.00**	Power Card	24	-										1						
6KAF61944	**$4835.00**	Power Card	24	-											1					
6KAF61945	**$5020.00**	Power Card	24	-												1				
6KAF61946	**$1825.00**	Power Card	33	-													1			
6KAF61947	**$1825.00**	Power Card	33	-														1		
6KAF61948	**$1920.00**	Power Card	34	-															1	
6KAF61949	**$1920.00**	Power Card	34	-																1
6KAF61843	**$2010.00**	Switch Mode Power Supply	22	-										1						
6KAF61844	**$2010.00**	Switch Mode Power Supply	22	-											1					
Inverter IGBTs																				
6KAF61884	**$1510.00**	Dual IGBT Module	31/33	150A												3	3			
6KAF61885	**$1895.00**	Dual IGBT Module	31/33	200A														3		
6KAF61886	**$2595.00**	Dual IGBT Module	32/34	300A															3	3

AF-650GP™ General Purpose Drive Replacement Parts

IP 20 - 460 Vac, 3-Phase, 50/60Hz Input (continued)
IP 55/66 - 460 Vac, 3-Phase, 50/60Hz Input (continued)

Product Number	List Price GO-5RP	Description	Unit Size	Rating	Drive Hp and Quantity Per Drive															
					1/2	1	2	3	5	7.5	10	15	20	25	30	40	50	60	75	100
Brake IGBT																				
6KAF61884	**$1510.00**	Dual IGBT Module	31/33	150A												1	1	1		
6KAF61400	**$2105.00**	Dual IGBT Module	32/34	200A															1	
6KAF61886	**$2595.00**	Dual IGBT Module	32/34	300A																1
Rectifiers																				
6KAF61887	**$820.00**	Thyristor Module	31/33	180A												3	3	3		
6KAF61888	**$1130.00**	Thyristor Module	32/34	240A															3	3
RFI Filters																				
6KAF63378	**$680.00**	RFI Filter (class A2)	21	-								1	1							
6KAF63381	**$685.00**	RFI Filter (class A2)	22	-										1	1					
6KAF63427	**$40.00**	RFI Filter (class A2)	31	-												1	1	1		
6KAF63377	**$1235.00**	RFI Filter (class A1/B)	21	-								1	1							
6KAF63380	**$1495.00**	RFI Filter (class A1/B)	22	-										1	1					
6KAF63425	**$4265.00**	RFI Filter (class A1/B)	31	-												1	1	1		
6KAF63422	**$4750.00**	RFI Filter (class A1/B)	32	-															1	1
6KAF61412	**$1325.00**	RFI Filter (class A1/B)	23	-								1	1							
6KAF61416	**$1535.00**	RFI Filter (class A1/B)	24	-										1	1	1				
6KAF61419	**$2565.00**	RFI Filter (class A1/B)	33	-													1	1		
6KAF61420	**$3185.00**	RFI Filter (class A1/B)	34	-															1	1
Current Transducers																				
6KAF61894	**$1310.00**	Current Transducer Card	31/33	-												1	1	1		
6KAF61897	**$1620.00**	Current Transducer Card	32/34	-															1	1
DC Link																				
6KAF65160	**$910.00**	DC Capacitors	31	3700uF												2				
6KAF65159	**$1050.00**	DC Capacitors	31	4500uF													2			
6KAF65158	**$1275.00**	DC Capacitors	31	5300uF														2		
6KAF65157	**$825.00**	DC Capacitors	32	3700uF															2	
6KAF65156	**$1030.00**	DC Capacitors	32	4500uF																2
6KAF61421	**$1625.00**	DC Capacitors	33	5300uF														2		
6KAF61422	**$675.00**	DC Capacitors	34	3700uF															2	
6KAF61423	**$1440.00**	DC Capacitors	33/34	4500uF													2			2
6KAF61060	**$1200.00**	DC Link Reactors	21	780uH								1								
6KAF61061	**$1260.00**	DC Link Reactors	21	580uH									1							
6KAF61062	**$1260.00**	DC Link Reactors	22	490uH										1						
6KAF61063	**$1385.00**	DC Link Reactors	22	410uH											1					
6KAF61035	**$2205.00**	DC Link Reactors	31	300uH												1				
6KAF61036	**$2630.00**	DC Link Reactors	31	260uH													1			
6KAF61037	**$2960.00**	DC Link Reactors	31	200uH														1		
6KAF61038	**$3535.00**	DC Link Reactors	32	170uH															1	
6KAF61039	**$4090.00**	DC Link Reactors	32	100uH																1
6KAF61954	**$2015.00**	DC Link Assembly	24	-										1						
6KAF61955	**$2500.00**	DC Link Assembly	24	-											1	1				
Fans																				
6KAF61009	**$160.00**	Fan Assembly	12	-	1	1	1	1	1											
6KAF61010	**$160.00**	Fan Assembly	13	-						1	1									
6KAF61017	**$295.00**	Fan Assembly	15	-	1	1	1	1	1	1	1									
6KAF63563	**$270.00**	External Fan (IP20)	23	12W								1	1							
6KAF63699	**$250.00**	External Fan (IP20)	24	12W										1	1	1				
6KAF64292	**$250.00**	External Fan (IP20)	33	12W													2	2		
6KAF64294	**$355.00**	External Fan (IP20)	34	18W															2	2
6KAF63407	**$455.00**	External Fan (IP55)	21	22W								1	1							
6KAF63406	**$640.00**	External Fan (IP55)	22	22W										1	1					
6KAF63865	**$645.00**	External Fan (IP55)	31	26W												1	1	1		
6KAF63867	**$1235.00**	External Fan (IP55)	32	22W															1	1
6KAF63440	**$100.00**	Internal Fan	21/23	5.8W								1	1							
6KAF63441	**$100.00**	Internal Fan	22/24	5.8W										1	1	1				
6KAF63923	**$110.00**	Internal Fan	31/32/33/34	5.8W												1	1	1	1	1
Accessory Bags																				
6KAF61022	**$275.00**	Connectors Accessory Bag	12/13	-	1	1	1	1	1	1	1									
6KAF61023	**$240.00**	Connectors Accessory Bag	15	-	1	1	1	1	1	1	1									
6KAF62060	**$120.00**	Connectors Accessory Bag	21	-								1	1							
6KAF62061	**$125.00**	Connectors Accessory Bag	22	-										1	1					
6KAF60980	**$140.00**	Connectors Accessory Bag	23	-								1	1							
6KAF61300	**$270.00**	Connectors Accessory Bag	24	-										1	1	1				
6KAF60046	**$200.00**	Connectors Accessory Bag	31	-												1	1	1		
6KAF60047	**$210.00**	Connectors Accessory Bag	32	-															1	1
6KAF60981	**$225.00**	Connectors Accessory Bag	33	-													1	1		
6KAF60982	**$270.00**	Connectors Accessory Bag	34	-															1	
6KAF60983	**$270.00**	Connectors Accessory Bag	34	-																1
6KAF60633	**$55.00**	Brake and Load Sharing Connectors Bag	12/13/15	-	1	1	1	1	1	1	1									

AF-650GP™ General Purpose Drive Replacement Parts

IP 00 - 575 Vac, 3-Phase, 50/60Hz Input
IP 55/66 - 575 Vac, 3-Phase, 50/60Hz Input

Product Number	List Price GO-5RP	Description	Unit Size	Rating	Drive Hp and Quantity Per Drive														
					1	2	3	5	7.5	10	15	20	25	30	40	50	60	75	100
Main Control Card																			
6KAF61109	**$950.00**	Control Card	-	-	1	1	1	1	1	1	1	1	1	1	1	1	1	1	1
Keypad																			
KYPDACGP1	**$500.00**	Replacement Graphical Keypad	-	-	1	1	1	1	1	1	1	1	1	1	1	1	1	1	1
6KAF61007	**$45.00**	Frame w/o option A or B	12/13/23	-	1	1	1	1	1	1	1	1							
6KAF61008	**$60.00**	Frame w option A or B	12/13/23	-	1	1	1	1	1	1	1	1							
6KAF60284	**$75.00**	Frame	24/33/34	-									1	1	1	1	1	1	1
6KAF63414	**$40.00**	Frame	15/21/22/31/32	-	1	1	1	1	1	1	1	1	1	1	1	1	1	1	1
6KAF61011	**$40.00**	Terminal cover w/o option A or B	12/13	-	1	1	1	1	1	1									
6KAF61012	**$40.00**	Terminal cover w option A or B	12/13	-	1	1	1	1	1	1									
6KAF61411	**$65.00**	Terminal cover	23	-							1	1							
6KAF61410	**$95.00**	Terminal cover	23	-							1	1							
Power Card																			
6KAF61858	**$5020.00**	Power Card	21	-							1								
6KAF61859	**$5020.00**	Power Card	21	-								1							
6KAF61935	**$5200.00**	Power Card	22	-									1						
6KAF61940	**$5200.00**	Power Card	22	-										1					
6KAF61928	**$1735.00**	Power Card	31	-											1				
6KAF61929	**$1735.00**	Power Card	31	-												1			
6KAF61930	**$1735.00**	Power Card	31	-													1		
6KAF61931	**$1920.00**	Power Card	32	-														1	
6KAF61932	**$1920.00**	Power Card	32	-															1
6KAF61961	**$4925.00**	Power Card	23	-							1								
6KAF61962	**$5110.00**	Power Card	23	-								1							
6KAF61963	**$5200.00**	Power Card	24	-									1						
6KAF61964	**$5300.00**	Power Card	24	-										1					
6KAF61965	**$5390.00**	Power Card	24	-											1				
6KAF61966	**$1825.00**	Power Card	33	-												1			
6KAF61967	**$1825.00**	Power Card	33	-													1		
6KAF61968	**$1920.00**	Power Card	34	-														1	
6KAF61969	**$1920.00**	Power Card	34	-															1
6KAF61875	**$2085.00**	Switch Mode Power Supply	22	-									1						
6KAF61876	**$2085.00**	Switch Mode Power Supply	22	-										1					
Inverter IGBTs																			
6KAF61403	**$1475.00**	Dual IGBT Module	31/33	100A												3			
6KAF61409	**$1745.00**	Dual IGBT Module	31/33	150A													3		
6KAF61404	**$2400.00**	Dual IGBT Module	32/34	200A														3	
6KAF61432	**$3950.00**	Dual IGBT Module	32/34	300A															3
Brake IGBT																			
6KAF61403	**$1475.00**	Dual IGBT Module	31/33	100A												1	1		
6KAF61404	**$2400.00**	Dual IGBT Module	31/33	200A														1	1
Rectifiers																			
6KAF61429	**$1165.00**	Thyristor Module	33	115A												3	3		
6KAF61430	**$1920.00**	Thyristor Module	34	220A														3	3
RFI Filters																			
6KAF63378	**$680.00**	RFI Filter (class A2)	21	-							1	1							
6KAF63381	**$685.00**	RFI Filter (class A2)	22	-									1	1					
6KAF63377	**$1235.00**	RFI Filter (class A1/B)	21	-							1	1							
6KAF63380	**$1495.00**	RFI Filter (class A1/B)	22	-									1	1					
6KAF63425	**$4265.00**	RFI Filter (class A1/B)	31	-											1	1	1		
6KAF63422	**$4745.00**	RFI Filter (class A1/B)	32	-														1	1
6KAF61412	**$1325.00**	RFI Filter (class A1/B)	23	-							1	1							
6KAF61416	**$1535.00**	RFI Filter (class A1/B)	24	-									1	1	1				
6KAF61419	**$2565.00**	RFI Filter (class A1/B)	33	-												1	1		
6KAF61420	**$3190.00**	RFI Filter (class A1/B)	34	-														1	1
Current Transducers																			
6KAF61898	**$1625.00**	Current Transducer Card	31/33	-											1	1	1		
6KAF61899	**$1640.00**	Current Transducer Card	32/34	-														1	1
DC Link																			
6KAF61424	**$860.00**	DC Capacitors	31/33	4500uF											2	2	2		
6KAF61425	**$1360.00**	DC Capacitors	32/34	2700uF														2	2
6KAF61060	**$1200.00**	DC Link Reactors	21	780uH							1								
6KAF61061	**$1260.00**	DC Link Reactors	21	580uH								1							
6KAF61062	**$1260.00**	DC Link Reactors	22	490uH									1						
6KAF61063	**$1385.00**	DC Link Reactors	22	410uH										1					
6KAF61035	**$2210.00**	DC Link Reactors	31	300uH											1				
6KAF61036	**$2630.00**	DC Link Reactors	31	260uH												1			
6KAF61037	**$2600.00**	DC Link Reactors	31	200uH													1		
6KAF61038	**$3535.00**	DC Link Reactors	32	170uH														1	
6KAF61039	**$4100.00**	DC Link Reactors	32	100uH															1
6KAF61959	**$2325.00**	DC Link Assembly	24	-									1	1	1				

AF-650GP™ General Purpose Drive Replacement Parts

IP 00 - 575 Vac, 3-Phase, 50/60Hz Input (continued)
IP 55/66 - 575 Vac, 3-Phase, 50/60Hz Input (continued)

Product Number	List Price GO-5RP	Description	Unit Size	Rating	Drive Hp and Quantity Per Drive														
					1	2	3	5	7.5	10	15	20	25	30	40	50	60	75	100
Fans																			
6KAF61009	**$160.00**	Fan Assembly	12	-	1	1	1	1											
6KAF61010	**$160.00**	Fan Assembly	13	-					1	1									
6KAF61017	**$295.00**	Fan Assembly	15	-	1	1	1	1	1	1									
6KAF63563	**$270.00**	External Fan (IP20)	23	12W							1	1							
6KAF63699	**$250.00**	External Fan (IP20)	24	12W									1	1	1				
6KAF64292	**$250.00**	External Fan (IP20)	33	12W												2	2		
6KAF64294	**$355.00**	External Fan (IP20)	34	18W														2	2
6KAF63407	**$455.00**	External Fan (IP55)	21	22W							1	1							
6KAF63406	**$640.00**	External Fan (IP55)	22	22W									1	1					
6KAF63865	**$645.00**	External Fan (IP55)	31	26W											1	1	1		
6KAF63867	**$1235.00**	External Fan (IP55)	32	22W														1	1
6KAF63440	**$100.00**	Internal Fan	21/23	5.8W							1	1							
6KAF63441	**$100.00**	Internal Fan	22/24	5.8W									1	1	1				
6KAF63923	**$110.00**	Internal Fan	31/32/33/34	5.8W											1	1	1	1	1
Accessory Bags																			
6KAF61022	**$275.00**	Connectors Accessory Bag	12/13	-	1	1	1	1	1	1									
6KAF61023	**$240.00**	Connectors Accessory Bag	15	-	1	1	1	1	1	1									
6KAF62060	**$120.00**	Connectors Accessory Bag	21	-							1	1							
6KAF62061	**$125.00**	Connectors Accessory Bag	22	-									1	1					
6KAF60980	**$140.00**	Connectors Accessory Bag	23	-							1	1							
6KAF61300	**$270.00**	Connectors Accessory Bag	24	-									1	1	1				
6KAF60046	**$200.00**	Connectors Accessory Bag	31	-											1	1	1		
6KAF60047	**$210.00**	Connectors Accessory Bag	32	-														1	1
6KAF60981	**$225.00**	Connectors Accessory Bag	33	-												1	1		
6KAF60982	**$270.00**	Connectors Accessory Bag	34	-														1	
6KAF60983	**$270.00**	Connectors Accessory Bag	34	-															1
6KAF60633	**$55.00**	Brake and Load Sharing Connectors Bag	12/13/15	-	1	1	1	1	1	1									

High Power
IP 00 - 460 Vac, 3-Phase, 50/60Hz Input
IP 21/54 - 460 Vac, 3-Phase, 50/60Hz Input

Product Number	List Price GO-5RP	Description	Unit Size	Rating	Drive Hp and Quantity Per Drive														
					125	150	200	250	300	350	450	500	550	600	650	750	900	1000	1200
Main Control Card																			
6KAF61109	**$950.00**	Control Card	-	-	1	1	1	1	1	1	1	1	1	1	1	1	1	1	1
Keypad																			
KYPDACGP1	**$500.00**	Replacement Graphical Keypad	-	-	1	1	1	1	1	1	1	1	1	1	1	1	1	1	1
6KAF63414	**$40.00**	Frame	-	-	1	1	1	1	1	1	1	1	1	1	1	1	1	1	1
Power Card																			
6KAF6H8643	**$2100.00**	PCA3 - Power Card	-		1														
6KAF6H8644	**$2100.00**	PCA3 - Power Card	-			1													
6KAF6H8645	**$2100.00**	PCA3 - Power Card	-				1												
6KAF6H8646	**$2100.00**	PCA3 - Power Card	-					1											
6KAF6H8647	**$2100.00**	PCA3 - Power Card	-						1										
6KAF6H8648	**$2100.00**	PCA3 - Power Card	-							1									
6KAF6H8649	**$2100.00**	PCA3 - Power Card	-								1								
6KAF6H8650	**$2100.00**	PCA3 - Power Card	-									1							
6KAF6H8651	**$2100.00**	PCA3 - Power Card	-										1						
6KAF6H8780	**$2625.00**	PCA3 - Power Card	-											3					
6KAF6H8781	**$2625.00**	PCA3 - Power Card	-												3				
6KAF6H8782	**$2625.00**	PCA3 - Power Card	-													3			
6KAF6H8783	**$2625.00**	PCA3 - Power Card	-														3		
6KAF6H8784	**$2625.00**	PCA3 - Power Card	-															4	
6KAF6H8785	**$2625.00**	PCA3 - Power Card	-																4
6KAF6H8308	**$95.00**	PCA4 - Current Scaling PCA, 4.54 Ohm	-		1														
6KAF6H8309	**$95.00**	PCA4 - Current Scaling PCA, 3.79 Ohm	-			1													
6KAF6H8310	**$100.00**	PCA4 - Current Scaling PCA, 3.10 Ohm	-				1												
6KAF6H8311	**$95.00**	PCA4 - Current Scaling PCA, 2.56 Ohm	-					1			1	1				2			3
6KAF6H8312	**$100.00**	PCA4 - Current Scaling PCA, 5.10 Ohm	-						1										
6KAF6H8554	**$100.00**	PCA4 - Current Scaling PCA, 4.21 Ohm	-							1				2	2			3	
6KAF6H8627	**$135.00**	PCA4 - Current Scaling PCA, 2.32 Ohm	-										1				2		
6KAF6H8773	**$1840.00**	MDCIC board, CC	-											1	1	1	1	1	1
6KAF6H8626	**$1650.00**	PCA5 - Gate Drive PCA,CC	-		1	1	1	1	1	1	1	1	1						
6KAF6H8307	**$215.00**	PCA8 - HF PCA	-		1	1	1	1	1	1	1	1	1						
6KAF6H8306	**$1535.00**	PCA11 - Softcharge PCA,CC	-		1	1	1	1	1										
6KAF6H8555	**$1550.00**	PCA11 - Softcharge PCA,CC	-							1	1	1	1						
6KAF6H8510	**$240.00**	PCA9 - Balance PCA	-		1	1	1	2	2	2	2	2	2						

AF-650GP™ General Purpose Drive Replacement Parts

IP 00 - 460 Vac, 3-Phase, 50/60Hz Input (continued)
IP 21/54 - 460 Vac, 3-Phase, 50/60Hz Input (continued)

Product Number	List Price GO-5RP	Description	Unit Size	Rating	Drive Hp and Quantity Per Drive														
					125	150	200	250	300	350	450	500	550	600	650	750	900	1000	1200
Inverter IGBTs																			
6KAF6H8628	**$5700.00**	IGBT 1, 2 - IGBT kit, 300A	-		1		2	2											
6KAF6H8629	**$7630.00**	IGBT 1, 2 - IGBT kit, 450A	-			1			2										
6KAF6H8630	**$5740.00**	IGBT 1, 2, 3 - IGBT kit, 300A	-							3									
6KAF6H8631	**$7790.00**	IGBT 1, 2, 3 - IGBT kit, 450A	-								3	3	3						
6KAF6H8323	**$105.00**	C 2,3,4,5,6,7,8,9,10 - CAP IGBT Snubber, 1000V, 1.5uF	-		3	3	6	6	6	9	9	9	9						
6KAF6H8749	**$107800.00**	Inverter Module	-											2					
6KAF6H8750	**$127300.00**	Inverter Module	-												2				
6KAF6H8751	**$144000.00**	Inverter Module	-													2			
6KAF6H8752	**$171250.00**	Inverter Module	-														2		
6KAF6H8753	**$127300.00**	Inverter Module	-															3	
6KAF6H8754	**$144000.00**	Inverter Module	-																3
Brake IGBT																			
6KAF6H8316	**$3370.00**	IGB T4,5 - Brake IGBT kit	-		1	1	2	2	2	2	2	2	2						
Rectifiers																			
6KAF6H8317	**$1400.00**	SCR 1, 2, 3 - SCR/Diode kit, 160A	-		3	3													
6KAF6H8318	**$1435.00**	SCR 1, 2, 3 - SCR/Diode kit, 175A	-				3												
6KAF6H8319	**$2275.00**	SCR 1, 2, 3 - SCR/Diode kit, 250A	-					3											
6KAF6H8320	**$2460.00**	SCR 1, 2, 3 - SCR/Diode kit, 330A	-						3										
6KAF6H8558	**$2620.00**	SCR 1, 2, 3 - SCR kit, 500A	-							3	3	3	3						
6KAF6H8559	**$2340.00**	D 1, 2, 3 - Diode kit, 600A	-							3	3	3	3						
6KAF6H8718	**$101810.00**	Rectifier Module	-											1					
6KAF6H8719	**$101810.00**	Rectifier Module	-												1				
6KAF6H8720	**$137000.00**	Rectifier Module	-													1			
6KAF6H8721	**$137000.00**	Rectifier Module	-														1		
6KAF6H8722	**$185000.00**	Rectifier Module	-															1	
6KAF6H8723	**$185000.00**	Rectifier Module	-																1
Current Transducers																			
6KAF6H8342	**$525.00**	L2, 3, 4 - Current Sensor, 300A	-		3	3	3	3											
6KAF6H8343	**$755.00**	L2, 3, 4 - Current Sensor, 500A	-						3	3									
6KAF6H8563	**$1925.00**	L2, 3, 4 - Current Sensor, 1000A	-								3	3	3						
DC Link																			
6KAF6H8324	**$4570.00**	CBANK 1, 2 - CAP Bank, 4 Cap	-		1			2	1										
6KAF6H8325	**$6115.00**	CBANK 1, 2 - CAP Bank, 6 Cap	-			1	1		1										
6KAF6H8636	**$8410.00**	CBANK 1, 2 - CAP Bank, 6 Cap	-							2	1								
6KAF6H8637	**$9570.00**	CBANK 1, 2 - CAP Bank, 8 Cap	-								1	2	2						
6KAF6H8337	**$3185.00**	L1 - Bus Inductor, 200uH	-		1														
6KAF6H8338	**$3380.00**	L1 - Bus Inductor, 157uH	-			1													
6KAF6H8339	**$3720.00**	L1 - Bus Inductor, 136uH	-				1												
6KAF6H8340	**$3950.00**	L1 - Bus Inductor, 109uH	-					1											
6KAF6H8341	**$4175.00**	L1 - Bus Inductor, 87uH	-						1										
6KAF6H8564	**$6600.00**	L1 - Bus Inductor, 62uH	-							1									
6KAF6H8565	**$7140.00**	L1 - Bus Inductor, 51uH	-								1	1	1						
6KAF6H8322	**$515.00**	R1 - Softcharge Resistor, 27 Ohm, 110W	-		1	1	1	1	1										
6KAF6H8560	**$575.00**	R1 - Softcharge Resistor, 27 Ohm, 155W	-							1	1	1	1						
Fuses																			
6KAF6H8334	**$300.00**	FU 1, 2, 3 - Fuse Main, 350A	-		3	3													
6KAF6H8335	**$345.00**	FU 1, 2, 3 - Fuse Main, 630A	-				3	3	3										
6KAF6H8591	**$560.00**	FU 1, 2, 3 - Fuse Main, 700A	-							3									
6KAF6H8592	**$840.00**	FU 1,2,3 - Fuse Main, 900A	-								3	3	3						
6KAF6H8769	**$3460.00**	Fuse Mains, 2000A	-											3	3	3	3		
6KAF6H8770	**$3860.00**	Fuse Mains, 2500A	-															3	3
6KAF6H8767	**$1555.00**	Fuse DC, 1100A	-											4	4			6	
6KAF6H8768	**$1370.00**	Fuse, DC, 1400 A	-													4	4		6
6KAF6H8336	**$130.00**	Fuse Softcharge, 20A, PKG3	-		1	1	1	1	1	1	1	1	1						
6KAF6H8440	**$78.00**	FU 5 - Fuse, 4A, PKG3, Power PCA, Fan	-		1	1	1	1	1	1	1	1	1						
6KAF6H8440	**$78.00**	FU 4 - Fuse,4A,PKG3,Power PCA,Fan	-		1	1	1	1	1	1									
6KAF6H8609	**$225.00**	FU 4 - Fuse, 15A, PKG3, Fan	-								1	1	1						
Fans																			
6KAF6H8329	**$2185.00**	F1+C1 - Heatsink Fan Assy	-		1	1	1	1	1										
6KAF6H8578	**$4270.00**	F1+C1 - Heatsink Fan Assy	-							1									
6KAF6H8579	**$9975.00**	F1+C1 - Heatsink Fan Assy	-								1	1	1						
6KAF6H8771	**$2990.00**	Heatsink Fan	-											3	3	3	3	4	4
6KAF6H8330	**$1580.00**	F 2,3 - Door Fan Kit	41/42/51		1	1	1	1	1	1	1	1	1						
6KAF6H8331	**$170.00**	Door Vent Kit	41/42/51		1	1	1	1	1	1	1	1	1						
6KAF6H8332	**$155.00**	Door Fan Filter, PKG10 (IP54/Nema 12 Drive)	41/42/51		1	1	1	1	1	1	1	1	1						
6KAF6H8639	**$225.00**	F 4 - DC Top Fan, IP00/Open Chassis Drive	43/44		1	1	1	1	1										
6KAF6H8333	**$1150.00**	F 2 - Door/Top AC Fan	52							1	1	1	1						
6KAF6H8333	**$1150.00**	F 2,3 - Door/Top AC Fan	41/42/51		1	1	1	1	1	1	1	1	1						
6KAF6H8772	**$4250.00**	Fan Door	-											3	3	3	3	3	3
6KAF6H8612	**$770.00**	FU 5 - Fuse Fan, Input Plate	-							1	1	1	1						
6KAF6H8344	**$500.00**	TR 1 - Fan Transformer Assy, 500V	-		1	1	1	1	1										
6KAF6H8566	**$580.00**	TR 1 - Fan Transformer Assy	-							1									
6KAF6H8567	**$1990.00**	TR 1 - Fan Transformer Assy, 1500VA	-								1	1	1						
6KAF6H8577	**$1410.00**	L5 - Heatsink Fan Inductor	-								1	1	1						

Prices and data subject to change without notice

AF-650GP™ General Purpose Drive Replacement Parts

IP 00 - 690 Vac, 3-Phase, 50/60Hz Input
IP 21/54 - 690 Vac, 3-Phase, 50/60Hz Input

Product Number	List Price GO-5RP	Description	Unit Size	Rating	Drive Hp and Quantity Per Drive 125	150	200	250	300	350	400	500	600	650	750	900	1000	1150	1250	1350
Main Control Card																				
6KAF61109	**$950.00**	Control Card	-	-	1	1	1	1	1	1	1	1	1	1	1	1	1	1	1	1
Keypad																				
KYPDACGP1	**$500.00**	Replacement Graphical Keypad	-	-	1	1	1	1	1	1	1	1	1	1	1	1	1	1	1	1
6KAF61007	**$45.00**	Frame	-	-	1	1	1	1	1	1	1	1	1	1	1	1	1	1	1	1
Power Card																				
6KAF6H8696	**$2100.00**	Power Card	-		1															
6KAF6H8680	**$2100.00**	Power Card	-			1														
6KAF6H8681	**$2100.00**	Power Card	-				1													
6KAF6H8682	**$2100.00**	Power Card	-					1												
6KAF6H8683	**$2100.00**	Power Card	-						1											
6KAF6H8684	**$2100.00**	Power Card	-							1										
6KAF6H8685	**$2100.00**	Power Card	-								1									
6KAF6H8686	**$2100.00**	Power Card	-									1								
6KAF6H8687	**$2100.00**	Power Card	-										1							
6KAF6H8688	**$2100.00**	Power Card	-											1						
6KAF6H8689	**$2100.00**	Power Card	-												1					
6KAF6H8792	**$2625.00**	Power Card	-													3				
6KAF6H8793	**$2625.00**	Power Card	-														3			
6KAF6H8794	**$2625.00**	Power Card	-															3		
6KAF6H8795	**$2625.00**	Power Card	-																4	
6KAF6H8796	**$2625.00**	Power Card	-																	4
6KAF6H8308	**$95.00**	PCA4 - Current Scaling PCA, 4.54 Ohm	-				1					1	1			2			3	
6KAF6H8309	**$95.00**	PCA4 - Current Scaling PCA, 3.79 Ohm	-											1			2			
6KAF6H8310	**$95.00**	PCA4 - Current Scaling PCA, 3.10 Ohm	-					1	1											
6KAF6H8311	**$95.00**	PCA4 - Current Scaling PCA, 2.56 Ohm	-							1					1			2		
6KAF6H8312	**$95.00**	PCA4 - Current Scaling PCA, 5.10 Ohm	-								1									
6KAF6H8525	**$95.00**	PCA4 - Current Scaling PCA, 5.85 Ohm	-		1	1														
6KAF6H8773	**$1840.00**	MDCIC Board, CC	-													1	1	1	1	
6KAF6H8626	**$1640.00**	PCA5 - Gate Drive PCA,CC	-		1	1	1	1	1	1	1	1	1	1	1					
6KAF6H8523	**$215.00**	PCA8 - HF PCA	-		1	1	1	1	1	1	1	1	1	1	1					
6KAF6H8522	**$1535.00**	PCA11 - Softcharge PCA, CC	-		1	1	1	1	1	1	1									
6KAF6H8466	**$1535.00**	PCA11 - Softcharge PCA, CC	-									1	1	1	1					
6KAF6H8526	**$250.00**	PCA9 - Balance, PCA	-		1	1	1	2	2	2	2	2	2	2	2					
Inverter IGBTs																				
6KAF6H8632	**$8300.00**	IGBT 1, 2 - IGBT kit, 300A	-		1	1		2	2											
6KAF6H8633	**$10815.00**	IGBT 1, 2 - IGBT kit, 50A	-				1			2	2									
6KAF6H8634	**$8440.00**	IGBT 1,2,3 - IGBT kit, 300A	-									3	3							
6KAF6H8635	**$10975.00**	IGBT 1,2,3 - IGBT kit, 450A	-											3	3					
6KAF6H8534	**$160.00**	C2,3,4,5,6,7,8,9,10 - CAP IGBT Snubber, 1250V, 1uF	-		3	3	3	6	6	6	6	9	9	9	9					
6KAF6H8760	**$196925.00**	Inverter Module	-													2				
6KAF6H8761	**$291985.00**	Inverter Module	-														2			
6KAF6H8762	**$322260.00**	Inverter Module	-															2		
6KAF6H8763	**$196925.00**	Inverter Module	-																3	
6KAF6H8764	**$291985.00**	Inverter Module	-																	3
Brake IGBT																				
6KAF6H8316	**$3370.00**	IGBT 4, 5 - Brake IGBT kit	-		1	1	1	2	2	2	2	2	2	2	2					
Rectifiers																				
6KAF6H8529	**$1415.00**	SCR 1, 2, 3 - SCR/Diode kit, 160A	-		3	3	3	3												
6KAF6H8530	**$2830.00**	SCR 1, 2, 3 - SCR/Diode kit, 280A	-						3	3	3									
6KAF6H8434	**$3360.00**	SCR 1, 2, 3 - SCR kit, 430A	-									3	3	3	3					
6KAF6H8435	**$4290.00**	D 1, 2, 3 - Diode kit, 540A	-									3	3	3	3					
6KAF6H8729	**$265810.00**	Rectifier Module	-													1				
6KAF6H8730	**$265810.00**	Rectifier Module	-														1			
6KAF6H8731	**$265810.00**	Rectifier Module	-															1		
6KAF6H8732	**$357675.00**	Rectifier Module	-																1	
6KAF6H8733	**$357675.00**	Rectifier Module	-																	1
Current Transducers																				
6KAF6H8342	**$525.00**	L2, 3, 4 - Current Sensor, 300A	-		3	3	3	3	3	3										
6KAF6H8343	**$750.00**	L2, 3, 4 - Current Sensor, 500A	-								3	3	3	3						
6KAF6H8563	**$1925.00**	L2, 3, 4 - Current Sensor, 1000A	-												3					
DC Link																				
6KAF6H8532	**$5420.00**	CBANK 1, 2 - CAP Bank, 4 Cap	-		1	1		2	2	1										
6KAF6H8533	**$7360.00**	CBANK 1, 2 - CAP Bank, 6 Cap	-				1			1	2									
6KAF6H8638	**$12310.00**	CBANK 1, 2 - CAP Bank, 8 Cap	-									2	2	2	2					
6KAF6H8536	**$3435.00**	L1 - Bus Inductor, 350uH	-		1	1														
6KAF6H8537	**$3550.00**	L1 - Bus Inductor, 250uH	-				1													
6KAF6H8538	**$3975.00**	L1 - Bus Inductor, 195uH	-					1	1											
6KAF6H8339	**$3720.00**	L1 - Bus Inductor, 136uH	-							1										
6KAF6H8340	**$3950.00**	L1 - Bus Inductor, 109uH	-								1									
6KAF6H8469	**$8730.00**	L1 - Bus Inductor, 73uH	-									1	1	1	1					
6KAF6H8531	**$565.00**	R1 - Softcharge Resistor, 68 Ohm, 110W	-		1	1	1	1	1	1	1									
6KAF6H8467	**$550.00**	R1 - Softcharge Resistor, 68 Ohm, 155W	-									1	1	1	1					

AF-650GP™ General Purpose Drive Replacement Parts

IP 00 - 690 Vac, 3-Phase, 50/60Hz Input (continued)
IP 21/54 - 690 Vac, 3-Phase, 50/60Hz Input (continued)

Product Number	List Price GO-5RP	Description	Unit Size	Rating	Drive Hp and Quantity Per Drive 125	150	200	250	300	350	400	500	600	650	750	900	1000	1150	1250
Fuses																			
6KAF6H8334	**$300.00**	FU 1, 2, 3 - Fuse Main, 350A	-		3	3	3												
6KAF6H8591	**$560.00**	FU 1, 2, 3 - Fuse Main, 700A	-									3	3	3					
6KAF6H8592	**$850.00**	FU 1, 2, 3 - Fuse Main, 900A	-												3				
6KAF6H8540	**$570.00**	FU 1, 2, 3 - Fuse Main, 550A	-					3	3	3	3								
6KAF6H8769	**$3560.00**	Fuse Mains, 2000A														3	3	3	3
6KAF6H8767	**$1555.00**	Fuse DC, 1100A	-													4	4	4	6
6KAF6H8336	**$130.00**	Fuse Softcharge, 20A, PKG3	-		1	1	1	1	1	1	1	1	1	1	1				
6KAF6H8440	**$80.00**	FU 5 - Fuse, 4A, PKG3, Power PCA, Fan	-		1	1	1	1	1	1	1	1	1	1	1				
6KAF6H8440	**$80.00**	FU 4 - Fuse, 4A, PKG3, Power PCA, Fan	-		1	1	1	1	1	1	1	1	1						
6KAF6H8609	**$225.00**	FU 4 - Fuse, 15A, PKG3, Fan	-											1	1				
Fans																			
6KAF6H8329	**$2185.00**	F1+C1 - Heatsink Fan Assy	-		1	1	1	1	1	1	1								
6KAF6H8578	**$4275.00**	F1+C1 - Heatsink Fan Assy	-									1	1						
6KAF6H8579	**$9975.00**	F1+C1 - Heatsink Fan Assy	-											1	1				
6KAF6H8771	**$2990.00**	Heatsink Fan	-													3	3	3	4
6KAF6H8330	**$1580.00**	F 2,3 - Door Fan Kit	41/42/51		1	1	1	1	1	1	1	1	1	1	1				
6KAF6H8331	**$170.00**	Door Vent kit	41/42/51		1	1	1	1	1	1	1	1	1	1	1				
6KAF6H8332	**$150.00**	Door Fan Filter, PKG10 (IP54/Nema 12 Drive)	41/42/51		1	1	1	1	1	1	1	1	1	1	1				
6KAF6H8639	**$225.00**	F 4 - DC Top Fan, IP00/Open Chassis	43/44		1	1	1	1	1	1	1								
6KAF6H8333	**$1150.00**	F 2 - Door/Top AC Fan	52									1	1	1	1				
6KAF6H8333	**$1150.00**	F 2, 3 - Door/Top AC Fan	41/42/51		1	1	1	1	1	1	1	1	1	1	1				
6KAF6H8772	**$4250.00**	Door Fan	-													3	3	3	3
6KAF6H8535	**$800.00**	TR1 - Fan Transformer Assy, 690V, 400VA	-		1	1	1	1	1	1	1	1	1						
6KAF6H8471	**$570.00**	TR 1 - Fan Transformer Assy	-											1	1				
6KAF6H8577	**$1410.00**	L5 - Heatsink Fan Inductor	-											1	1				

High Power Cables
IP 00 - 460 Vac, 3-Phase, 50/60Hz Input
IP 21/54 - 460 Vac, 3-Phase, 50/60Hz Input

Product Number	List Price GO-5RP	Description	Unit Size	Drive Hp and Quantity Per Drive 125	150	200	250	300	350	450	500	550
Cables												
6KAF6H8640	**$70.00**	CBL1 - Keypad Cable for IP54/Nema 12 Drive Type	41/42	1	1	1	1	1				
6KAF6H8586	**$75.00**	CBL1 - Keypad Cable	5X						1	1	1	1
6KAF6H8641	**$80.00**	CBL2 - Control Cable PCA, 44pin	4X & 5X	1	1	1	1	1	1	1	1	1
6KAF6H8541	**$185.00**	CBL5 - Current Sensor Cable	4X	1	1							
6KAF6H8349	**$365.00**	CBL5 - Currnet Sensor Cable	42			1	1	1				
6KAF6H8568	**$235.00**	CBL5 - Current Sensor Cable	5X						1			
6KAF6H8569	**$245.00**	CBL5 - Current Sensor Cable	5X							1	1	1
6KAF6H8542	**$75.00**	CBL8 - HS Fan Cable	41	1	1							
6KAF6H8359	**$100.00**	CBL8 - HS Fan Cable	42			1	1	1				
6KAF6H8571	**$80.00**	CBL8 - Fan Cable for IP00/Open Chassis Drive Type	51						1			
6KAF6H8572	**$120.00**	CBL8 - Fan Cable for IP54/Nema 12 Drive Type	52						1			
6KAF6H8573	**$85.00**	CBL8 - Fan Cable for IP00/Open Chassis Drive Type	51							1	1	1
6KAF6H8574	**$125.00**	CBL8 - Fan Cable for IP54/Nema 12 Drive Type	52							1	1	1
6KAF6H8354	**$60.00**	CBL9 - Softcharge Cable RST prime	4X	1	1	1	1	1				
6KAF6H8570	**$55.00**	CBL9 - Softcharge Cable RST prime	5X						1	1	1	1
6KAF6H8358	**$55.00**	CBL12 - Door Fan Cable	41/42	1	1	1	1	1				
6KAF6H8544	**$110.00**	CBL13 - SCR Cable	41	1	1							
6KAF6H8357	**$110.00**	CBL13 - SCR Cable	42			1	1	1				
6KAF6H8575	**$205.00**	CBL13 - SCR Cable	5X						1	1	1	1
6KAF6H8356	**$45.00**	CBL14 - DC to Power PCA Cable	4X	1	1	1	1	1				
6KAF6H8576	**$50.00**	CBL14 - DC to Power PCA Cable	5X						1	1	1	1
6KAF6H8830	**$20.00**	CBL15 - RFI Switch Cable	4X	1	1	1	1	1				
6KAF6H8580	**$65.00**	CBL15 - RFI Switch Cable	5X						1	1	1	1
6KAF6H8363	**$30.00**	CBL16 - Gate Driver Cable, 16pin	41	1	1							
6KAF6H8350	**$41.00**	CBL16 - Gate Driver Cable, 16pin	42			1	1	1				
6KAF6H8581	**$45.00**	CBL16 - Gate Driver Cable, 16pin	5X						1	1	1	1
6KAF6H8364	**$60.00**	CBL17,18,19 IGBT Gate Cable	41	3	3							
6KAF6H8351	**$95.00**	CBL17,18,19 - IGBT Gate Cable	42			3	3	3				
6KAF6H8582	**$40.00**	CBL17,18,19 - IGBT Gate Cable	51						3	3	3	3
6KAF6H8352	**$65.00**	CBL20 - IGBT Temperature Cable	-	1	1	1	1	1	1	1	1	1
6KAF6H8365	**$40.00**	CBL21 - Brake IGBT Cable	41	1	1							
6KAF6H8368	**$65.00**	CBL21 - Brake IGBT Cable	42			1	1	1				
6KAF6H8583	**$85.00**	CBL21 - Brake IGBT Cable	5X						1	1	1	1
6KAF6H8366	**$320.00**	CBL22 - Brake Power Plus Cable	41	1	1							
6KAF6H8369	**$595.00**	CBL22 - Brake Power Plus Cable	42			1	1	1				
6KAF6H8367	**$320.00**	CBL23 - Brake Power Minus Cable	41	1	1							
6KAF6H8370	**$550.00**	CBL23 - Brake Power Minus Cable	42			1	1	1				
6KAF6H8543	**$55.00**	CBL24 - Softcharge RST Cable	41	1	1							

AF-650GP™ General Purpose Drive Replacement Parts

IP 00 - 460 Vac, 3-Phase, 50/60Hz Input (continued)
IP 21/54 - 460 Vac, 3-Phase, 50/60Hz Input (continued)

Product Number	List Price GO-5RP	Description	Unit Size	Drive Hp and Quantity Per Drive 125	150	200	250	300	350	450	500	550
Cables (continued)												
6KAF6H8353	**$75.00**	CBL24 - Softcharge RST Cable	42			1	1	1				
6KAF6H8584	**$45.00**	CBL24 - Softcharge RST Cable	5X						1	1	1	1
6KAF6H8355	**$45.00**	CBL25 - Softcharge to DC Bus Cable	4X	1	1	1	1	1				
6KAF6H8585	**$40.00**	CBL25 - Softcharge to DC Bus Cable	5X						1	1	1	1
6KAF6H8613	**$65.00**	CBL26 - Fuse Fan Cable	5X						1	1	1	1
Terminals, Labels, Insulators												
6KAF6H8374	**$215.00**	TB1 - Bus Bars, Terminals Line/Load	4X	3	3							
6KAF6H8375	**$260.00**	TB1 - Bus Bars, Terminals Line/Load	4X			3	3	3				
6KAF6H8587	**$690.00**	TB1 - Bus Bars, Terminal Block	5X						3	3	3	3
6KAF6H8374	**$215.00**	TB2 - Bus Bars, Terminals Line/Load	4X	3	3							
6KAF6H8375	**$255.00**	TB2 - Bus Bars, Terminals Line/Load	4X			3	3	3				
6KAF6H8587	**$690.00**	TB2 - Bus Bars, Terminal Block	5X						3	3	3	3
6KAF6H8395	**$260.00**	TB3 - Bus Bars, Terminal, Load Share & Brake	4X	2	2	2	2	2				
6KAF6H8399	**$410.00**	TB3 - Bus Bars, Terminal, Load Share, Left	4X						1	1	1	1
6KAF6H8404	**$415.00**	TB3 - Bus Bars, Terminal, Load Share. Right	4X						1	1	1	1
6KAF6H8395	**$260.00**	TB4 - Bus Bars, Terminal, Load Share & Brake	4X	2	2							
6KAF6H8399	**$410.00**	TB4 - Bus Bars, Terminal, Load Share, Left	4X			1	1	1				
6KAF6H8404	**$415.00**	TB4 - Bus Bars, Terminal, Load Share. Right	4X			1	1	1				
6KAF6H8587	**$690.00**	TB4 - Bus Bars, Terminal Block	5X						2	2	2	2
6KAF6H8371	**$135.00**	TB1 - Terminal Insulator Line/Load	4X	1	1	1	1	1				
6KAF6H8588	**$155.00**	TB1 - Insulator Terminal Block	5X						3	3	3	3
6KAF6H8371	**$135.00**	TB2 - Terminal Insulator Line/Load	4X	1	1	1	1	1				
6KAF6H8588	**$155.00**	TB2 - Insulator Terminal Block	5X						3	3	3	3
6KAF6H8372	**$80.00**	TB3 - Terminal Insulator, Brake & Load Share	4X	1	1	1	1	1	1	1	1	1
6KAF6H8372	**$80.00**	TB4 - Terminal Insulator, Brake & Load Share	4X	1	1	1	1	1				
6KAF6H8588	**$155.00**	TB4 - Insulator Terminal Block	5X						2	2	2	2
6KAF6H8373	**$515.00**	Terminal Block Label Set	4X	1	1	1	1	1				
6KAF6H8589	**$1460.00**	Terminal Block Label Set	5X						1	1	1	1
6KAF6H8545	**$60.00**	Insulator Mylar for IGBT Bus	41	1	1							
6KAF6H8421	**$65.00**	Insulator Mylar for IGBT Bus	42			1	1	1				
6KAF6H8590	**$150.00**	Insulator for IGBT- Chassis	5X						1	1	1	1
6KAF6H8547	**$30.00**	Insulator for IGBT Snubber Capacitor Support	-	1	1	2	2	2				
6KAF6H8410	**$285.00**	Bus Bar Stand Off, PKG10	-	12	12	17	17	17	11	11	11	11
6KAF6H8610	**$230.00**	IGBT Output Standoff, PKG9	5X						9	9	9	9
Bus Bars												
6KAF6H8380	**$145.00**	Bus Bars, SCR, R S T	4X	3	3							
6KAF6H8548	**$95.00**	Bracket, SCR Bus Bars Support	4X	1	1							
6KAF6H8394	**$210.00**	Bus Bars, SCR Input	4X			3						
6KAF6H8387	**$180.00**	Bus Bars, SCR Plus, 1	4X				3	3				
6KAF6H8595	**$1270.00**	Bus Bars, SCR/Di Input	5X						3	3	3	3
6KAF6H8379	**$620.00**	Bus Bars Assy, SCR	4X	1	1							
6KAF6H8381	**$150.00**	Bus Bars, SCR Minus	4X	2	2							
6KAF6H8393	**$325.00**	Bus Bars, SCR DC	-			2						
6KAF6H8385	**$290.00**	Bus Bars, SCR Minus, 1	4X				2	2				
6KAF6H8386	**$380.00**	Bus Bars, SCR Minus, 2	4X			1	1	1				
6KAF6H8388	**$380.00**	Bus Bars, SCR Plus, 2	4X			1	1	1				
6KAF6H8596	**$1535.00**	Bus Bars, SCR/Di Output	5X						2	2	2	2
6KAF6H8597	**$2500.00**	Bus Bars, DC Bus Plus, Before DC Reactor	5X						1	1	1	1
6KAF6H8598	**$2500.00**	Bus Bars, DC Bus Minus,Before DC Reactor	5X						1	1	1	1
6KAF6H8549	**$150.00**	Bus Bars, DC Link, Plus	4X	1	1							
6KAF6H8391	**$190.00**	Bus Bars, DC Link, Plus	4X	1	1							
6KAF6H8382	**$265.00**	Bus Bars, DC Link Minus	4X			2	2	2				
6KAF6H8599	**$715.00**	Bus Bars, DC Bus, After DC Reactor	5X						2	2	2	2
6KAF6H8376	**$670.00**	Bus Bars Assy, IGBT	4X	1	1							
6KAF6H8377	**$675.00**	Bus Bars Assy, IGBT-Inductor	4X			1	1	1				
6KAF6H8378	**$690.00**	Bus Bars Assy, IGBT-Capacitor	4X			1	1	1				
6KAF6H8600	**$3675.00**	Bus Bars Assy, IGBT-Inductor	5X						1	1	1	1
6KAF6H8601	**$865.00**	Bus Bars Assy, IGBT-Capacitor	5X						3	3	3	3
6KAF6H8390	**$100.00**	Bus Bars, IGBT, U V W	4X	3	3							
6KAF6H8392	**$230.00**	Bus Bars, Motor, 2	4X	3	3							
6KAF6H8383	**$260.00**	Bus Bars, Motor, U W	4X			2	2	2				
6KAF6H8384	**$215.00**	Bus Bars, Motor V	4X			1	1	1				
6KAF6H8389	**$220.00**	Bus Bars, I-Sensor	4X			3	3	3				
6KAF6H8602	**$1175.00**	Bus Bars, IGBT Output	5X						3	3	3	3
6KAF6H8603	**$1180.00**	Bus Bars, Over Fan Box	5X						3	3	3	3
6KAF6H8604	**$530.00**	Bus Bars, Current Sensor 5352	5X						3			
6KAF6H8605	**$550.00**	Bus Bars, Current Sensor 5452-5502	4X							3	3	3
6KAF6H8397	**$190.00**	Bus Bars, Brake Plus	4X	1	1							
6KAF6H8398	**$210.00**	Bus Bars, Brake Minus	4X	1	1							
6KAF6H8396	**$320.00**	Bus Bars, Brake	4X			1	1	1				

IP 00 - 460 Vac, 3-Phase, 50/60Hz Input (continued)
IP 21/54 - 460 Vac, 3-Phase, 50/60Hz Input (continued)

Product Number	List Price GO-5RP	Description	Unit Size	Drive Hp and Quantity Per Drive 125	150	200	250	300	350	450	500	550
Bus Bars (continued)												
6KAF6H8606	**$8620.00**	Bus Bars, Brake Assy	5X						1	1	1	1
6KAF6H8401	**$475.00**	Bus Bars, Load Share Plus	4X	1	1							
6KAF6H8400	**$460.00**	Bus Bars, Load Share Minus	4X	1	1							
6KAF6H8403	**$855.00**	Bus Bars, Load Share Plus	4X			1	1	1				
6KAF6H8402	**$655.00**	Bus Bars, Load Share Minus	4X			1	1	1				
6KAF6H8607	**$2055.00**	Bus Bars, Load Share Plus	5X						1	1	1	1
6KAF6H8608	**$2070.00**	Bus Bars, Load Share Minus	5X						1	1	1	1
6KAF6H8405	**$1370.00**	Bus Bars, SCR Input 2	4X	3	3							
6KAF6H8406	**$835.00**	Bus Bars, SCR, T, 1	4X			3	3	3				

IP 00 - 690 Vac, 3-Phase, 50/60Hz Input
IP 21/54 - 690 Vac, 3-Phase, 50/60Hz Input

Product Number	List Price GO-5RP	Description	Unit Size	Drive Hp and Quantity Per Drive 125	150	200	250	300	350	450	500	550	600	650
Cables														
6KAF6H8640	**$70.00**	CBL1 - Keypad Cable for IP54/Nema 12 Drive Type	41/42		1	1	1	1	1	1				
6KAF6H8586	**$75.00**	CBL1 - Keypad Cable	5X								1	1	1	1
6KAF6H8641	**$80.00**	CBL2 - Control Cable PCA, 44pin	4X & 5X	1	1	1	1	1	1	1	1	1	1	1
6KAF6H8541	**$185.00**	CBL5 - Current Sensor Cable	4X	1	1	1								
6KAF6H8349	**$365.00**	CBL5 - Currnet Sensor Cable	42				1	1	1	1				
6KAF6H8568	**$235.00**	CBL5 - Current Sensor Cable	5X								1	1	1	
6KAF6H8569	**$245.00**	CBL5 - Current Sensor Cable	5X											1
6KAF6H8542	**$75.00**	CBL8 - HS Fan Cable	41	1	1	1								
6KAF6H8359	**$100.00**	CBL8 - HS Fan Cable	42				1	1	1	1				
6KAF6H8571	**$80.00**	CBL8 - Fan Cable for IP00/Open Chassis Drive Type	51								1	1		
6KAF6H8572	**$120.00**	CBL8 - Fan Cable for IP54/Nema 12 Drive Type	52								1	1		
6KAF6H8573	**$85.00**	CBL8 - Fan Cable for IP00/Open Chassis Drive Type	51										1	1
6KAF6H8574	**$125.00**	CBL8 - Fan Cable for IP54/Nema 12 Drive Type	52										1	1
6KAF6H8354	**$60.00**	CBL9 - Softcharge Cable RST prime	4X	1	1	1	1	1	1	1				
6KAF6H8570	**$55.00**	CBL9 - Softcharge Cable RST prime	5X								1	1	1	1
6KAF6H8358	**$55.00**	CBL12 - Door Fan Cable	41/42	1	1	1	1	1	1	1				
6KAF6H8544	**$110.00**	CBL13 - SCR Cable	41	1	1	1								
6KAF6H8357	**$110.00**	CBL13 - SCR Cable	42				1	1	1	1				
6KAF6H8575	**$205.00**	CBL13 - SCR Cable	5X								1	1	1	1
6KAF6H8356	**$45.00**	CBL14 - DC to Power PCA Cable	4X	1	1	1	1	1	1	1				
6KAF6H8576	**$50.00**	CBL14 - DC to Power PCA Cable	5X								1	1	1	1
6KAF6H8363	**$30.00**	CBL16 - Gate Driver Cable, 16pin	41	1	1	1								
6KAF6H8350	**$41.00**	CBL16 - Gate Driver Cable, 16pin	42				1	1	1	1				
6KAF6H8581	**$45.00**	CBL16 - Gate Driver Cable, 16pin	5X								1	1	1	1
6KAF6H8364	**$60.00**	CBL17,18,19 IGBT Gate Cable	41	3	3	3								
6KAF6H8351	**$95.00**	CBL17,18,19 - IGBT Gate Cable	42				3	3	3	3				
6KAF6H8582	**$40.00**	CBL17,18,19 - IGBT Gate Cable	51								3	3	3	3
6KAF6H8352	**$65.00**	CBL20 - IGBT Temperature Cable	-	1	1	1	1	1	1	1	1	1	1	1
6KAF6H8365	**$40.00**	CBL21 - Brake IGBT Cable	41	1	1	1								
6KAF6H8368	**$65.00**	CBL21 - Brake IGBT Cable	42				1	1	1	1				
6KAF6H8583	**$85.00**	CBL21 - Brake IGBT Cable	5X								1	1	1	1
6KAF6H8366	**$320.00**	CBL22 - Brake Power Plus Cable	41	1	1	1								
6KAF6H8369	**$595.00**	CBL22 - Brake Power Plus Cable	42				1	1	1	1				
6KAF6H8367	**$320.00**	CBL23 - Brake Power Minus Cable	41	1	1	1								
6KAF6H8370	**$550.00**	CBL23 - Brake Power Minus Cable	42				1	1	1	1				
6KAF6H8543	**$55.00**	CBL24 - Softcharge RST Cable	41	1	1	1								
6KAF6H8353	**$75.00**	CBL24 - Softcharge RST Cable	42				1	1	1	1				
6KAF6H8584	**$45.00**	CBL24 - Softcharge RST Cable	5X								1	1	1	1
6KAF6H8355	**$45.00**	CBL25 - Softcharge to DC Bus Cable	4X	1	1	1	1	1	1	1				
6KAF6H8585	**$40.00**	CBL25 - Softcharge to DC Bus Cable	5X								1	1	1	1
6KAF6H8613	**$65.00**	CBL26 - Fuse Fan Cable	5X								1	1	1	1
Terminals, Labels, Insulators														
6KAF6H8374	**$215.00**	TB1 - Bus Bars, Terminals Line/Load	4X	3	3	3								
6KAF6H8375	**$260.00**	TB1 - Bus Bars, Terminals Line/Load	4X				3	3	3	3				
6KAF6H8587	**$690.00**	TB1 - Bus Bars, Terminal Block	5X								3	3	3	3
6KAF6H8374	**$215.00**	TB2 - Bus Bars, Terminals Line/Load	4X	3	3	3								
6KAF6H8375	**$255.00**	TB2 - Bus Bars, Terminals Line/Load	4X				3	3	3	3				
6KAF6H8587	**$690.00**	TB2 - Bus Bars, Terminal Block	5X								3	3	3	3
6KAF6H8395	**$260.00**	TB3 - Bus Bars, Terminal, Load Share & Brake	4X	2	2	2	2	2	2	2				
6KAF6H8399	**$410.00**	TB3 - Bus Bars, Terminal, Load Share, Left	4X								1	1	1	1
6KAF6H8404	**$415.00**	TB3 - Bus Bars, Terminal, Load Share. Right	4X								1	1	1	1
6KAF6H8395	**$260.00**	TB4 - Bus Bars, Terminal, Load Share & Brake	4X	2	2	2								

IP 00 - 690 Vac, 3-Phase, 50/60Hz Input (continued)
IP 21/54 - 690 Vac, 3-Phase, 50/60Hz Input (continued)

Product Number	List Price GO-5RP	Description	Unit Size	Drive Hp and Quantity Per Drive 125	150	200	250	300	350	450	500	550	600	650
Terminals, Labels, Insulators (continued)														
6KAF6H8399	**$410.00**	TB4 - Bus Bars, Terminal, Load Share, Left	4X				1	1	1	1				
6KAF6H8404	**$415.00**	TB4 - Bus Bars, Terminal, Load Share. Right	4X				1	1	1	1				
6KAF6H8587	**$690.00**	TB4 - Bus Bars, Terminal Block	5X								2	2	2	2
6KAF6H8371	**$135.00**	TB1 - Terminal Insulator Line/Load	4X	1	1	1	1	1	1	1				
6KAF6H8588	**$155.00**	TB1 - Insulator Terminal Block	5X								3	3	3	3
6KAF6H8371	**$135.00**	TB2 - Terminal Insulator Line/Load	4X	1	1	1	1	1	1	1				
6KAF6H8588	**$155.00**	TB2 - Insulator Terminal Block	5X								3	3	3	3
6KAF6H8372	**$80.00**	TB3 - Terminal Insulator, Brake & Load Share	4X	1	1	1	1	1	1	1	1	1	1	1
6KAF6H8372	**$80.00**	TB4 - Terminal Insulator, Brake & Load Share	4X	1	1	1	1	1	1	1				
6KAF6H8588	**$155.00**	TB4 - Insulator Terminal Block	5X								2	2	2	2
6KAF6H8373	**$515.00**	Terminal Block Label Set	4X	1	1	1	1	1	1	1				
6KAF6H8589	**$1460.00**	Terminal Block Label Set	5X								1	1	1	1
6KAF6H8545	**$60.00**	Insulator Mylar for IGBT Bus	41	1	1	1								
6KAF6H8421	**$65.00**	Insulator Mylar for IGBT Bus	42				1	1	1	1				
6KAF6H8590	**$150.00**	Insulator for IGBT- Chassis	5X								1	1	1	1
6KAF6H8547	**$30.00**	Insulator for IGBT Snubber Capacitor Support	-	1	1	1	2	2	2	2				
6KAF6H8546	**$160.00**	Line Fuse Insulator	-				1	1	1	1				
6KAF6H8410	**$285.00**	Bus Bar Stand Off, PKG10	-	12	12	12	17	17	17	17	11	11	11	11
6KAF6H8610	**$230.00**	IGBT Output Standoff, PKG9	5X								9	9	9	9
Bus Bars														
6KAF6H8380	**$145.00**	Bus Bars, SCR, R S T	4X	3	3	3								
6KAF6H8548	**$95.00**	Bracket, SCR Bus Bars Support	4X	1	1	1								
6KAF6H8394	**$210.00**	Bus Bars, SCR Input	4X				3							
6KAF6H8387	**$180.00**	Bus Bars, SCR Plus, 1	4X					3	3	3				
6KAF6H8700	**$1615.00**	Bus Bars, SCR/Di Input	5X								3	3	3	3
6KAF6H8379	**$620.00**	Bus Bars Assy, SCR	4X	1	1	1								
6KAF6H8381	**$150.00**	Bus Bars, SCR Minus	4X	2	2	2								
6KAF6H8393	**$325.00**	Bus Bars, SCR DC	-				2							
6KAF6H8385	**$290.00**	Bus Bars, SCR Minus, 1	4X					2	2	2				
6KAF6H8386	**$380.00**	Bus Bars, SCR Minus, 2	4X				1	1	1	1				
6KAF6H8388	**$380.00**	Bus Bars, SCR Plus, 2	4X				1	1	1	1				
6KAF6H8701	**$1780.00**	Bus Bars, SCR/Di Output	5X								2	2	2	2
6KAF6H8597	**$2500.00**	Bus Bars, DC Bus Plus, Before DC Reactor	5X								1	1	1	1
6KAF6H8598	**$2500.00**	Bus Bars, DC Bus Minus,Before DC Reactor	5X								1	1	1	1
6KAF6H8549	**$150.00**	Bus Bars, DC Link, Plus	4X	1	1	1								
6KAF6H8391	**$190.00**	Bus Bars, DC Link, Plus	4X	1	1	1								
6KAF6H8382	**$265.00**	Bus Bars, DC Link Minus	4X				2	2	2	2				
6KAF6H8599	**$715.00**	Bus Bars, DC Bus, After DC Reactor	5X								2	2	2	2
6KAF6H8376	**$670.00**	Bus Bars Assy, IGBT	4X	1	1	1								
6KAF6H8377	**$675.00**	Bus Bars Assy, IGBT-Inductor	4X				1	1	1	1				
6KAF6H8378	**$690.00**	Bus Bars Assy, IGBT-Capacitor	4X				1	1	1	1				
6KAF6H8600	**$3675.00**	Bus Bars Assy, IGBT-Inductor	5X								1	1	1	1
6KAF6H8601	**$865.00**	Bus Bars Assy, IGBT-Capacitor	5X								3	3	3	3
6KAF6H8390	**$100.00**	Bus Bars, IGBT, U V W	4X	3	3	3								
6KAF6H8392	**$230.00**	Bus Bars, Motor, 2	4X	3	3	3								
6KAF6H8383	**$260.00**	Bus Bars, Motor, U W	4X				2	2	2	2				
6KAF6H8384	**$215.00**	Bus Bars, Motor V	4X				1	1	1	1				
6KAF6H8389	**$220.00**	Bus Bars, I-Sensor	4X				3	3	3	3				
6KAF6H8602	**$1175.00**	Bus Bars, IGBT Output	5X								3	3	3	3
6KAF6H8603	**$1180.00**	Bus Bars, Over Fan Box	5X								3	3	3	3
6KAF6H8604	**$530.00**	Bus Bars, Current Sensor 5352	5X								3	3	3	
6KAF6H8605	**$550.00**	Bus Bars, Current Sensor 5452-5502	4X											3
6KAF6H8397	**$190.00**	Bus Bars, Brake Plus	4X	1	1	1								
6KAF6H8398	**$210.00**	Bus Bars, Brake Minus	4X	1	1	1								
6KAF6H8396	**$320.00**	Bus Bars, Brake	4X				1	1	1	1				
6KAF6H8606	**$8620.00**	Bus Bars, Brake Assy	5X								1	1	1	1
6KAF6H8401	**$475.00**	Bus Bars, Load Share Plus	4X	1	1	1								
6KAF6H8400	**$460.00**	Bus Bars, Load Share Minus	4X	1	1	1								
6KAF6H8403	**$855.00**	Bus Bars, Load Share Plus	4X				1	1	1	1				
6KAF6H8402	**$655.00**	Bus Bars, Load Share Minus	4X				1	1	1	1				
6KAF6H8607	**$2055.00**	Bus Bars, Load Share Plus	5X								1	1	1	1
6KAF6H8702	**$2520.00**	Bus Bars, Load Share Minus	5X								1	1	1	1
6KAF6H8405	**$1370.00**	Bus Bars, SCR Input 2	4X	3	3	3								
6KAF6H8406	**$835.00**	Bus Bars, SCR, T, 1	4X				3	3	3	3				

Product Description

The AF-600FP™ Fan and Pump Drive is a powerful, flexible, and easy to use AC variable torque drive ideally suited for HVAC, compressor, and pump applications. The drive is available in a standard configuration that includes IP20 or IP00 Chassis, LCD Keypad Display that can be remote mounted, DC Link Reactors, built-in Modbus RTU, Metasys N2, Apogee FLN P1, and RFI Class A2 Filter. Models are available at 208/230V from 1 to 60HP, 460V from 1 to 1350HP, and 575V from 1 to 1350HP.

Standard features like motor auto tuning, four auto-tuning PID controls, energy savings mode, and energy monitoring make the AF-600FP™ ideal for all your fan, pump, compressor, and blower applications. Its Quick Menu, Application Macros, and intuitive Keypad make it a time saver for start-up and commisioning. Optional LonWorks and BACnet communications modules along with IP55/54 NEMA 12 and IP66/NEMA 4X rated units allows it to be integrated into your building automation systems and stand-alone installations. Optional I/O modules and conformal coatings allow it to be used in complex or very harsh environments if needed. The AF-600FP™ is Plenum rated for mounting inside air handling ducts.

Product Numbering System Diagram

(Product number for illustrative purposes only)

Description	6K	FP	2	3	F50	X	2	R	L	C	A1

GE Product Code

Drive
- FP = AF-600 Fan and Pump Drive

Input Voltage
- 2 = 208/230V, 50/60 Hz
- 4 = 460V, 50/60 Hz
- 5 = 575V, 50/60 Hz

Input Phase
- 1 = 1-Phase
- 3 = 3-Phase

HP Rating
- F50 = 1/2 HP
- 010 = 10 HP
- 100 = 100 HP
- 1K0 = 1000 HP

Factory Installed Keypad
- X = Keypad

Drive Type
- 1 = IP21/Type 1
- 2 = IP55/NEMA 12
- 4 = IP66/NEMA 4X
- 9 = IP20/Open
- 8 = IP00/Open

A1/B RFI Filter
- X = No A1/B RFI Filter Installed
- R = A1/B RFI Filter Installed

Load Share
- X = Standard Unit
- L = Load Share Terminals

Conformal Coating
- X = No Conformal Coatings
- C = Conformal Coatings

Revision
- A1 = 1st Revision
- A2 = Future

AF-600FP™ Fan and Pump Drive
Pricing

230V, 1-Phase, 50/60Hz Input

HP Rating	kW Rating	Rated Output Amps	Overload Amps (110% 1 Min)	Standard Unit Includes:	Standard Unit Product No.	List Price GO-5FP	List Price Adders, GO-5FP: Drive Type (Digit 11) (1) IP21 NEMA 1	(2) IP55 NEMA 12	Factory Installed Options (Digit 14) (R) RFI filter A1/B	(Digit 15) (X) Future Use	(Digit 16) (C) Conformal Coating
2	1.5	7.5	8.3	IP21/NEMA 1[1] RFI: A2 Keypad	6KFP21002X1XXXA1	$2015.00	std	$250.00	$150.00	N/A	$210.00
3	2.2	10.6	11.7		6KFP21003X1XXXA1	$2020.00	std	$250.00	$150.00	N/A	$210.00
5	3.7	16.7	18.4		6KFP21005X1XXXA1	$2290.00	std	$275.00	$230.00	N/A	$210.00
7.5	5.5	24.2	26.6		6KFP21007X1XXXA1	$2400.00	std	$555.00	$455.00	N/A	$210.00
10	7.5	30.8	33.9		6KFP21010X1XXXA1	$2665.00	std	$555.00	$455.00	N/A	$210.00
20	15	59.4	65.3		6KFP21020X1XXXA1[2]	$5440.00	std	$960.00	N/A	N/A	$210.00
30	22	88	96.8		6KFP21030X1XXXA1[2]	$8270.00	std	$1370.00	N/A	N/A	$210.00

[1]Drives are rated NEMA 1 without the need for a separate kit.
[2]A1/B Factory installed RFI Filters are not available and the units **do not** have as standard the A2 RFI Filter and furthermore **do not** meet EN55011 Class A2.

230V, 3-Phase, 50/60Hz Input

HP Rating	kW Rating	Rated Output Amps	Overload Amps (110% 1 Min)	Standard Unit[3] Includes:	Standard Unit Product No.	List Price GO-5FP	List Price Adders, GO-5FP: Drive Type (Digit 11) (9) IP20 Chassis	(2) IP55 NEMA 12	(4) IP66 NEMA 4X	Factory Installed Options (Digit 14) (R) RFI filter A1/B	(Digit 15) (L) Load Share	(Digit 16) (C) Conformal Coating
1	0.75	4.6	7.3	IP20 (9) Chassis RFI: A2 Keypad	6KFP23001X9XXXA1	$785.00	std	$250.00	$550.00	$150.00	N/A	$210.00
2	1.5	7.5	8.3		6KFP23002X9XXXA1	$850.00	std	$250.00	$550.00	$150.00	N/A	$210.00
3	2.2	10.6	11.7		6KFP23003X9XXXA1	$925.00	std	$250.00	$550.00	$150.00	N/A	$210.00
5	3.7	16.7	18.4		6KFP23005X9XXXA1	$1200.00	std	$275.00	$550.00	$230.00	N/A	$210.00
7.5	5.5	24.2	26.6		6KFP23007X9XXXA1	$1375.00	std	$555.00	$575.00	$455.00	$200.00*	$210.00
10	7.5	30.8	33.9		6KFP23010X9XXXA1	$1650.00	std	$555.00	$920.00	$455.00	$234.00*	$210.00
15	11	46.2	50.8		6KFP23015X9XXXA1	$2005.00	std	$555.00	$920.00	$455.00	$245.00*	$210.00
20	15	59.4	65.3		6KFP23020X9XXXA1	$2405.00	std	$960.00	$1600.00	$690.00	$290.00	$210.00
25	18.5	74.8	82.3		6KFP23025X9XXXA1	$2975.00	std	$960.00	$1950.00	$690.00	$350.00	$210.00
30	22	88	96.8		6KFP23030X9XXXA1	$3700.00	std	$1370.00	$2390.00	$1115.00	$365.00	$210.00
40	30	115	127		6KFP23040X9XXXA1	$5275.00	std	$1370.00	$2870.00	$1115.00	$430.00	$210.00
50	37	143	157		6KFP23050X9XXXA1	$6295.00	std	$1825.00	$3270.00	$1550.00	$485.00	$210.00
60	45	170	187		6KFP23060X9XXXA1	$7425.00	std	$1825.00	$3750.00	$1550.00	$560.00	$210.00

[3]IP21/NEMA 1 Kits are available as Field Installed Options for all 230V drives from 1 HP to 60 HP. See Page 15-43.
*Only for IP55/NEMA 12 and IP66/NEMA 4X

460V, 1-Phase, 50/60Hz Input

HP Rating	kW Rating	Rated Output Amps	Overload Amps (150% 1 Min)	Standard Unit Includes:	Standard Unit Product No.	List Price GO-5FP	List Price Adders, GO-5FP: Drive Type (Digit 11) (1) IP21 NEMA 1	(2) IP55 NEMA 12	Factory Installed Options (Digit 14) (R) RFI filter A1/B	(Digit 15) (X) Future Use	(Digit 16) (C) Conformal Coating
10	7.5	14.5	21.8	IP21/NEMA 1[1] RFI: A2 Keypad	6KFP41010X1XXXA1	$2885.00	std	$275.00	$275.00	N/A	$210.00
15	11	21	31.5		6KFP41015X1XXXA1[2]	$4040.00	std	$555.00	N/A	N/A	$210.00
25	18.5	34	51.0		6KFP41025X1XXXA1[2]	$6975.00	std	$555.00	N/A	N/A	$210.00
50	37	65	97.5		6KFP41050X1XXXA1[2]	$10255.00	std	$960.00	N/A	N/A	$210.00

[1]Drives are rated NEMA 1 without the need for a separate kit.
[2]A1/B Factory installed RFI Filters are not available and the units **do not** have as standard the A2 RFI Filter and furthermore **do not** meet EN55011 Class A2.

460V, 3-Phase, 50/60Hz Input

HP Rating	kW Rating	Rated Output Amps	Overload Amps (110% 1 Min)	Standard Unit[4] Includes:	Standard Unit Product No.	List Price GO-5FP	List Price Adders, GO-5FP: Drive Type (Digit 11) (9) IP20 Chassis	(2) IP55 NEMA 12	(4) IP66 NEMA 4X	Factory Installed Options (Digit 14) (R) RFI filter A1/B	(Digit 15) (L) Load Share	(Digit 16) (C) Conformal Coating
1	0.75	2.4	2.6	IP20 (9) Chassis RFI: A2 Keypad	6KFP43001X9XXXA1	$920.00	std	$250.00	$550.00	$150.00	N/A	$210.00
2	1.5	4.1	4.5		6KFP43002X9XXXA1	$980.00	std	$250.00	$550.00	$150.00	N/A	$210.00
3	2.2	5.6	6.2		6KFP43003X9XXXA1	$1120.00	std	$250.00	$550.00	$150.00	N/A	$210.00
5	4	10	11		6KFP43005X9XXXA1	$1260.00	std	$275.00	$550.00	$275.00	N/A	$210.00
7.5	5.5	13	14.3		6KFP43007X9XXXA1	$1410.00	std	$275.00	$550.00	$275.00	N/A	$210.00
10	7.5	16	17.6		6KFP43010X9XXXA1	$1720.00	std	$275.00	$575.00	$275.00	N/A	$210.00
15	11	24	26.4		6KFP43015X9XXXA1	$2030.00	std	$555.00	$575.00	$455.00	$200.00*	$210.00
20	15	32	35.2		6KFP43020X9XXXA1	$2656.00	std	$555.00	$920.00	$455.00	$234.00*	$210.00
25	18.5	37.5	41.3		6KFP43025X9XXXA1	$3370.00	std	$555.00	$920.00	$455.00	$245.00*	$210.00
30	22	44	48.4		6KFP43030X9XXXA1	$3840.00	std	$960.00	$1600.00	$690.00	$290.00	$210.00
40	30	61	67.1		6KFP43040X9XXXA1	$4855.00	std	$960.00	$1600.00	$690.00	$310.00	$210.00
50	37	73	80.3		6KFP43050X9XXXA1	$5490.00	std	$960.00	$1600.00	$690.00	$350.00	$210.00
60	45	90	99		6KFP43060X9XXXA1	$6500.00	std	$1370.00	$1950.00	$1115.00	$365.00	$210.00
75	55	106	116.6		6KFP43075X9XXXA1	$8150.00	std	$1370.00	$1950.00	$1115.00	$430.00	$210.00
100	75	147	161.7		6KFP43100X9XXXA1	$10350.00	std	$1825.00	$3270.00	$1550.00	$485.00	$210.00
125	90	177	194.7		6KFP43125X9XXXA1	$12390.00	std	$1825.00	$3750.00	$1550.00	$560.00	$210.00

[4]IP21/NEMA 1 Kits are available as Field Installed Options for all 460V drives from 1 HP to 125 HP. See Page 15-43.
*Only for IP55/NEMA 12 and IP66/NEMA 4X

460V, 3-Phase, 50/60Hz Input

HP Rating	kW Rating	Rated Output Amps	Overload Amps (110% 1 Min)	Standard Unit Includes:	Standard Unit Product No.	List Price GO-5FP	List Price Adders, GO-5FP: Drive Type (Digit 11) (8) IP00 Chassis	(1) IP21 NEMA 1	(2) IP54 NEMA 12	Factory Installed Options (Digit 14) (R) RFI filter A1/B	(Digit 15) (L) Load Share	(Digit 16) (C) Conformal Coating
150	110	190	209	IP00 (8) Chassis RFI: A2 Keypad	6KFP43150X8XXXA1	$14200.00	std	$1035.00	$3370.00	$2120.00	$625.00	$705.00
200	132	240	264		6KFP43200X8XXXA1	$17110.00	std	$1035.00	$3370.00	$2565.00	$755.00	$705.00
250	160	302	332		6KFP43250X8XXXA1	$20315.00	std	$1140.00	$3700.00	$3140.00	$920.00	$705.00
300	200	361	397		6KFP43300X8XXXA1	$22500.00	std	$1140.00	$3700.00	$3750.00	$1100.00	$705.00
350	250	443	487		6KFP43350X8XXXA1	$25900.00	std	$1140.00	$3700.00	$4475.00	$1315.00	$705.00
450	315	540	594	IP00 (8) Chassis RFI: A2 Keypad Conformal Coated	6KFP43450X8XXCA1	$32500.00	std	$3065.00	$6075.00	$5420.00	$1585.00	std
500	355	590	649		6KFP43500X8XXCA1	$42550.00	std	$3065.00	$6075.00	$6390.00	$1770.00	std
550	400	678	746		6KFP43550X8XXCA1	$54000.00	std	$3065.00	$6075.00	$7350.00	$2110.00	std
600	450	730	803		6KFP43600X8XXCA1	$61150.00	std	$3065.00	$6075.00	$8325.00	$2510.00	std
650	500	780	858	IP21/NEMA 1 (1) RFI: A2 Keypad Conformal Coated	6KFP43650X1XXCA1	$69000.00	N/A	std	$11170.00	$11655.00	N/A	std
750	560	890	979		6KFP43750X1XXCA1	$82000.00	N/A	std	$11170.00	$13085.00	N/A	std
900	630	1050	1155		6KFP43900X1XXCA1	$93000.00	N/A	std	$11170.00	$14890.00	N/A	std
1000	710	1160	1276		6KFP431K0X1XXCA1	$109000.00	N/A	std	$11170.00	$17295.00	N/A	std
1200	800	1380	1518		6KFP431K2X1XXCA1	$125000.00	N/A	std	$11170.00	$19735.00	N/A	std
1350	1000	1530	1683		6KFP431K3X1XXCA1	$145800.00	N/A	std	$11170.00	$22930.00	N/A	std

575V, 3-Phase, 50/60Hz Input

HP Rating	kW Rating	Rated Output Amps	Overload Amps (110% 1 Min)	Standard Unit[1] Includes:	Standard Unit Product No.	List Price GO-5FP	List Price Adders, GO-5FP: Drive Type (Digit 11) (9) IP20 Chassis	(2) IP55 NEMA 12	(4) IP66 NEMA 4X	Factory Installed Options (Digit 14) (R) RFI filter A1/B	(Digit 15) (L) Load Share	(Digit 16) (C) Conformal Coating
1	0.75	1.8	1.98	IP20 (9) Chassis Keypad	6KFP53001X9XXXA1	$1050.00	std	$250.00	$550.00	N/A	N/A	$210.00
2	1.5	2.7	2.97		6KFP53002X9XXXA1	$1120.00	std	$250.00	$550.00	N/A	N/A	$210.00
3	2.2	3.9	4.29		6KFP53003X9XXXA1	$1275.00	std	$250.00	$550.00	N/A	N/A	$210.00
5	4	6.1	6.71		6KFP53005X9XXXA1	$1440.00	std	$250.00	$550.00	N/A	N/A	$210.00
7.5	5.5	9	9.9		6KFP53007X9XXXA1	$1610.00	std	$275.00	$550.00	N/A	N/A	$210.00
10	7.5	11	12.1		6KFP53010X9XXXA1	$1965.00	std	$275.00	$550.00	N/A	N/A	$210.00
15	11	18	19.8		6KFP53015X9XXXA1	$2320.00	std	$555.00	$845.00	N/A	$200.00	$210.00
20	15	22	24.2		6KFP53020X9XXXA1	$3030.00	std	$555.00	$920.00	N/A	$234.00	$210.00
25	18.5	27	29.7		6KFP53025X9XXXA1	$3845.00	std	$555.00	$920.00	N/A	$245.00	$210.00
30	22	34	37.4		6KFP53030X9XXXA1	$4380.00	std	$960.00	$1600.00	N/A	$290.00	$210.00
40	30	41	45.1		6KFP53040X9XXXA1	$5535.00	std	$960.00	$1600.00	N/A	$310.00	$210.00
50	37	52	57.2		6KFP53050X9XXXA1	$6260.00	std	$960.00	$1600.00	N/A	$350.00	$210.00
60	45	62	68.2		6KFP53060X9XXXA1	$7410.00	std	$1370.00	$1950.00	N/A	$365.00	$210.00
75	55	83	91.3		6KFP53075X9XXXA1	$9295.00	std	$1370.00	$1950.00	N/A	$430.00	$210.00
100	75	100	110		6KFP53100X9XXXA1	$11800.00	std	$1825.00	$3270.00	N/A	$485.00	$210.00
125	90	131	144.1		6KFP53125X9XXXA1	$14125.00	std	$1825.00	$3750.00	N/A	$560.00	$210.00

[1]IP21/NEMA 1 Kits are available as Field Installed Options for all 575V drives from 1 HP to 125 HP. See Page 15-43.

575V, 3-Phase, 50/60Hz Input

HP Rating	kW Rating	Rated Output Amps	Overload Amps (110% 1 Min)	Standard Unit Includes:	Standard Unit Product No.	List Price GO-5FP	List Price Adders, GO-5FP: Drive Type (Digit 11) (8) IP00 Chassis	(1) IP21 NEMA 1	(2) IP54 NEMA 12	Factory Installed Options (Digit 12) (R) RFI filter A1/B	(Digit 13) (X) Future Use	(Digit 14) (C) Conformal Coating
150	110	155	170.5	IP00 (8) Chassis RFI: A2 Keypad Conformal Coated	6KFP53150X8XXCA1	$17100.00	std	$1190.00	$3990.00	N/A	N/A	std
200	132	192	211.2		6KFP53200X8XXCA1	$21150.00	std	$1190.00	$3990.00	N/A	N/A	std
250	160	242	266.2		6KFP53250X8XXCA1	$24850.00	std	$1190.00	$3990.00	N/A	N/A	std
300	200	290	319		6KFP53300X8XXCA1	$28495.00	std	$1190.00	$3990.00	N/A	N/A	std
350	250	344	378.4		6KFP53350X8XXCA1	$30860.00	std	$3525.00	$6990.00	N/A	N/A	std
400	315	400	440		6KFP53400X8XXCA1	$41880.00	std	$3525.00	$6990.00	N/A	N/A	std
450	355	450	495		6KFP53450X8XXCA1	$51060.00	std	$3525.00	$6990.00	N/A	N/A	std
500	400	500	550		6KFP53500X8XXCA1	$65180.00	std	$7500.00	$11170.00	N/A	N/A	std
600	450	570	627		6KFP53600X8XXCA1	$83000.00	std	$7500.00	$11170.00	N/A	N/A	std
650	500	630	693		6KFP53650X8XXCA1	$95150.00	std	$7500.00	$11170.00	N/A	N/A	std
750	560	730	803	IP21/NEMA 1 (1) RFI: A2 Keypad Conformal Coated	6KFP53750X8XXCA1	$120550.00	N/A	std	$11170.00	N/A	N/A	std
950	710	850	935		6KFP53950X1XXCA1	$137550.00	N/A	std	$11170.00	N/A	N/A	std
1050	800	945	1039.5		6KFP531K0X1XXCA1	$159900.00	N/A	std	$11170.00	N/A	N/A	std
1150	900	1060	1166		6KFP531K1X1XXCA1	$181050.00	N/A	std	$11170.00	N/A	N/A	std
1350	1000	1260	1386		6KFP531K3X1XXCA1	$200100.00	N/A	std	$11170.00	N/A	N/A	std

AF-600FP™ Fan and Pump Drive
Field Installed IP21/NEMA 1 Add-On Option Kits

IP21/NEMA 1 Add-On Option Kits

Voltage	HP Rating	kW Rating	IP21/NEMA 1 Kit Product No.	List Price GO-5AC	Fits AF-600FP™ IP20 Drive Product No.
	1	1.1	NEMA1ACA2	**$110.00**	6KFP23001X9XXXA1
	2	1.5	NEMA1ACA2	**$110.00**	6KFP23002X9XXXA1
	3	2.2	NEMA1ACA2	**$110.00**	6KFP23003X9XXXA1
	5	3.7	NEMA1ACA3	**$110.00**	6KFP23005X9XXXA1
	7.5	5.5	NEMA1ACB3	**$140.00**	6KFP23007X9XXXA1
	10	7.5	NEMA1ACB3	**$140.00**	6KFP23010X9XXXA1
230	15	11	NEMA1ACB3	**$140.00**	6KFP23015X9XXXA1
	20	15	NEMA1ACB4	**$150.00**	6KFP23020X9XXXA1
	25	18.5	NEMA1ACB4	**$150.00**	6KFP23025X9XXXA1
	30	22	NEMA1ACC3	**$160.00**	6KFP23030X9XXXA1
	40	30	NEMA1ACC3	**$160.00**	6KFP23040X9XXXA1
	50	37	NEMA1ACC4	**$175.00**	6KFP23050X9XXXA1
	60	45	NEMA1ACC4	**$175.00**	6KFP23060X9XXXA1
	1	1.1	NEMA1ACA2	**$110.00**	6KFP43001X9XXXA1
	2	1.5	NEMA1ACA2	**$110.00**	6KFP43002X9XXXA1
	3	2.2	NEMA1ACA2	**$110.00**	6KFP43003X9XXXA1
	5	3.7	NEMA1ACA2	**$110.00**	6KFP43005X9XXXA1
	7.5	5.5	NEMA1ACA3	**$115.00**	6KFP43007X9XXXA1
	10	7.5	NEMA1ACA3	**$115.00**	6KFP43010X9XXXA1
	15	11	NEMA1ACB3	**$140.00**	6KFP43015X9XXXA1
460	20	15	NEMA1ACB3	**$140.00**	6KFP43020X9XXXA1
	25	18.5	NEMA1ACB3	**$140.00**	6KFP43025X9XXXA1
	30	22	NEMA1ACB4	**$150.00**	6KFP43030X9XXXA1
	40	30	NEMA1ACB4	**$150.00**	6KFP43040X9XXXA1
	50	37	NEMA1ACB4	**$150.00**	6KFP43050X9XXXA1
	60	45	NEMA1ACC3	**$160.00**	6KFP43060X9XXXA1
	75	55	NEMA1ACC3	**$160.00**	6KFP43075X9XXXA1
	100	75	NEMA1ACC4	**$175.00**	6KFP43100X9XXXA1
	125	90	NEMA1ACC4	**$175.00**	6KFP43125X9XXXA1
	1	1.1	NEMA1ACA3	**$115.00**	6KFP53001X9XXXA1
	2	1.5	NEMA1ACA3	**$115.00**	6KFP53002X9XXXA1
	3	2.2	NEMA1ACA3	**$115.00**	6KFP53003X9XXXA1
	5	3.7	NEMA1ACA3	**$115.00**	6KFP53005X9XXXA1
	7.5	5.5	NEMA1ACA3	**$115.00**	6KFP53007X9XXXA1
	10	7.5	NEMA1ACA3	**$115.00**	6KFP53010X9XXXA1
	15	11	NEMA1ACB3	**$140.00**	6KFP53015X9XXXA1
575	20	15	NEMA1ACB3	**$140.00**	6KFP53020X9XXXA1
	25	18.5	NEMA1ACB3	**$140.00**	6KFP53025X9XXXA1
	30	22	NEMA1ACB4	**$150.00**	6KFP53030X9XXXA1
	40	30	NEMA1ACB4	**$150.00**	6KFP53040X9XXXA1
	50	37	NEMA1ACB4	**$150.00**	6KFP53050X9XXXA1
	60	45	NEMA1ACC3	**$160.00**	6KFP53060X9XXXA1
	75	55	NEMA1ACC3	**$160.00**	6KFP53075X9XXXA1
	100	75	NEMA1ACC4	**$175.00**	6KFP53100X9XXXA1
	125	90	NEMA1ACC4	**$175.00**	6KFP53125X9XXXA1

AF-600FP™ Fan and Pump Drive Options and Accessories

Remote Mounting Kit for graphical LCD Keypad

Remote Mounting Kit for mounting graphical LCD Keypad on enclosure door. Kit includes gasket, mounting brackets, and cable. Keypad is rated IP65.

Description	Product Number	List Price GO-5AC
Remote Mounting Kit for graphical LCD Keypad	RMKYPDAC	$95.00
Remote Mounting Kit without cable	OPCRMKNC	$85.00

Remote Mounting Kit

Profibus DP Communications Module

Profibus DP internal drive mounted module for use on AF-650GP™ and AF-600FP™ drives. Supports Profibus DP V1 communications networks.

Description	Product Number	List Price GO-5AC
Profibus DP Communications Module	OPCPDP	$725.00

Profibus DP Communications Module

DeviceNet Communications Module

DeviceNet internal drive mounted module for use on AF-650GP™ and AF-600FP™ drives. ODVA certified device.

Description	Product Number	List Price GO-5AC
DeviceNet Communications Module	OPCDEV	$600.00

DeviceNet Communications Module

Ethernet IP Communications Module[1]

Ethernet IP internal drive mounted module for use on AF-650GP™ and AF-600FP™ drives. ODVA certified device. Features 2-Port built-in switch. Also includes webserver and email notification.

Description	Product Number	List Price GO-5AC
Ethernet/IP Communications Module	OPCEIP	$700.00

[1]Requires I/O and network slots and cannot be used with any other network or I/O modules.

Modbus TCP Communications Module

Modbus TCP internal drive mounted module for use on AF-650GP™ and AF-600FP™ drives.

Description	Product Number	List Price GO-5AC
Modbus TCP Communications Module	OPCMBTCP	$700.00

ProfiNet RT Communications Module

ProfiNet RT internal drive mounted module for use on AF-650GP™ and AF-600FP™ drives.

Description	Product Number	List Price GO-5AC
ProfiNet RT Communications Module	OPCPRT	$700.00

LonWorks Communications Module

LonWorks internal drive mounted module for use on AF-600FP™ drives only. Supports LonWorks building automation communications networks.

Description	Product Number	List Price GO-5AC
LonWorks Communications Module	OPCLON	$600.00

BacNet Communications Module

BacNet internal drive mounted module for use on AF-600FP™ drives only. Supports BacNet MSTP building automation communications networks.

Description	Product Number	List Price GO-5AC
BacNet Communications Module	OPCBAC	$600.00

AF-600FP™ Fan and Pump Drive Options and Accessories

Relay Output Module

Relay Output internal drive mounted module for use on the AF-650GP™ and AF-600FP™ drives. Module adds (3) Form C relay outputs to the drive. Relays are rated at 2A at 240V resistive load.

Description	Product Number	List Price GO-5AC
Relay Output Module	OPCRLY	**$475.00**

Relay Output Module

Analog I/O Module

Analog I/O internal drive mounted module for us on the AF-600FP™ drive only.
Module Includes:

3) Analog Inputs 0-10V, 0/4-20mA
3) Analog Outputs 0-10V
Battery Back-Up power for AF-600FP™'s internal Real Time Clock

Description	Product Number	List Price GO-5AC
Analog I/O Module	OPCAIO	**$500.00**

Analog I/O Module

24V DC External Supply Module

24V DC External Supply internal drive mounted module for use on the AF-650GP™ and AF-600FP™ drives. This module accepts an external 24V DC supply which is used to keep the control board of the drive and other option modules powered in the event of a Line side power outage. Can be used with Communications and I/O Modules.

Description	Product Number	List Price GO-5AC
24V DC External Supply Module	OPC24VPS	**$240.00**

24V DC External Supply Module

General Purpose I/O Module

General Purpose I/O internal drive mounted module for use on AF-650GP™ and AF-600FP™ drives. Module includes:

3) 24V Digital Inputs
2) PNP/NPN Digital Outputs
2) 0-10V Analog Inputs
1) 0/4-20mA Analog Output

Description	Product Number	List Price GO-5AC
General Purpose I/O Module	OPCGPIO	**$475.00**

General Purpose I/O Module

Screw Terminal Accessory

Screw Terminal Accessory is available for field installation on AF-650GP™ and AF-600FP™ drives. These screw terminals can replace the cage clamp terminals which ship with each drive. This set of three terminals are for the digital inputs, analog I/O, and RS485 connection.

Description	Product Number	List Price GO-5AC
Screw Terminal Accessory	OPCTERM	**$25.00**

Pedestal Kit

Pedestal Kit allows Unit Size 41 and 42 drives (NEMA 1 and 12, 150HP to 350/400HP at 460V/575V AF-600 FP and 125HP to 300/400HP at 460/690V AF-650 GP) to be floor mounted.

Description	Product Number	List Price GO-5AC
Pedestal Kit	OPC4XPED	**$875.00**

USB Kit

This kit allows for the USB programming terminal to be brought out to the front cover of the drive. Works with all drive types.

Description	Product Number	List Price GO-5AC
For all drives up to Unit Size 5X	OPCUSB	**$75.00**
For all Unit Size 6X drives	OPCUSB6X	**$225.00**

Power Shields

These shields are used to cover the drive power terminals on NEMA 1 and NEMA 12 drive types.

Description	Product Number	List Price GO-5AC
For Unit Size 41 and 42 drives	OPCCOVER4142	**$520.00**
For Unit Size 51 drives	OPCCOVER51	**$1305.00**

AF-600FP™ Fan and Pump Drive
Dimensional Drawings

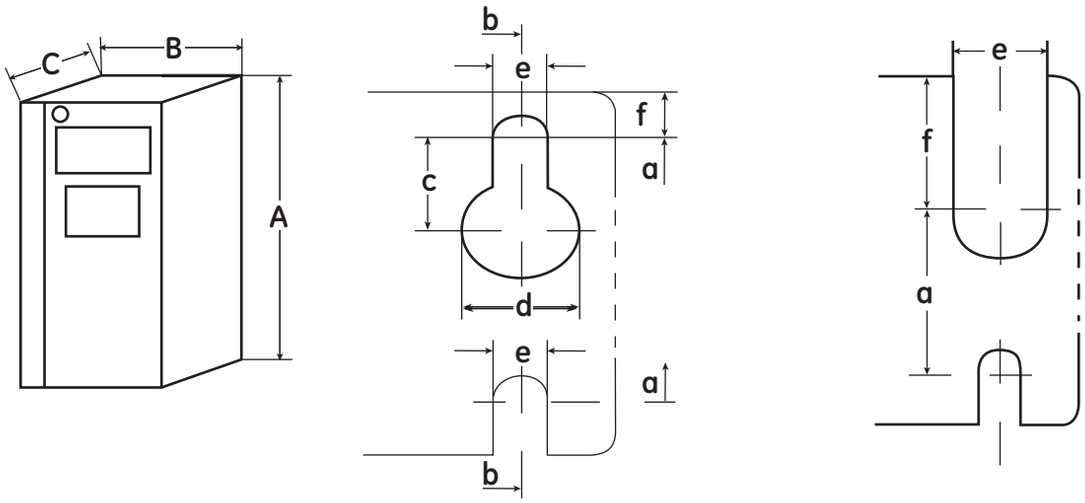

Mechanical Dimensions, 1X Unit Sizes

Unit Size	Dimensions	12	13	15
Drive Type		IP20 Open Chassis	IP20 Open Chassis	NEMA 12
Voltage				
240V		1 to 3HP	5HP	1 to 5HP
460V		1 to 5HP	7.5 to 10HP	1 to 10HP
575V			1 to 10HP	1 to 10HP
Height				
Height of backplate	A	10.55 in	10.55 in	16.54 in
Height with de-coupling plate	A	14.72 in	14.72 in	—
Distance between mounting holes	a	10.12 in	10.12 in	15.83 in
Width				
Width of backplate	B	3.54 in	5.12 in	9.53 in
Distance between mounting holes	b	2.76 in	4.33 in	8.46 in
Depth				
Depth without I/O and/or Network Option	C	8.07 in	8.07 in	7.68 in
Depth with I/O and/or Network Option	C	8.67 in	8.67 in	7.68 in
Screw Holes				
	c	0.315 in	0.315 in	0.325 in
	d	0.433 in	0.433 in	0.472 in
	e	0.216 in	0.216 in	0.256 in
	f	0.354 in	0.354 in	0.354 in
Weight		10.8 lbs	14.5 lbs	29.7/31.2 lbs

Mechanical Dimensions 2X Unit Sizes

Unit Size	Dimensions	21	22	23	24
Drive Type		NEMA 12	NEMA 12	IP20 Open Chassis	IP20 Open Chassis
Voltage					
240V 1-Phase		2 to 7.5HP	10HP	---	---
240V		7.5 to 15HP	20HP	7.5 to 15HP	20 to 25HP
460V 1-Phase		10HP	15HP	---	---
460V		15 to 25HP	30 to 40HP	15 to 25HP	30 to 50HP
575V		15 to 25HP	30 to 40HP	15 to 25HP	30 to 50HP
Height					
Height of backplate	A	18.9 in	25.6 in	15.7 in	20.5 in
Height with de-coupling plate	A	---	---	16.54 in	23.43 in
Distance between mounting holes	a	17.9 in	24.6 in	14.96 in	19.5 in
Width					
Width of backplate	B	9.53 in	9.53 in	6.5 in	9.06 in
Distance between mounting holes	b	8.27 in	8.27 in	5.5 in	7.87 in
Depth					
Depth without I/O and/or Network Option	C	10.24 in	10.24 in	9.81 in	9.53 in
Depth with I/O and/or Network Option	C	10.24 in	10.24 in	10.31 in	9.53 in
Screw Holes					
	c	0.472 in	0.472 in	0.315 in	---
	d	0.748 in	0.748 in	0.472 in	---
	e	0.354 in	0.354 in	0.268 in	0.335 in
	f	0.354 in	0.354 in	0.31 in	0.59 in
Weight		50.6 lbs	59.5 lbs	26.4 lbs	51.7 lbs

Mechanical Dimensions, 3X Unit Sizes

Unit Size	Dimensions	31	32	33	34
Drive Type		NEMA 12	NEMA 12	IP20 Open Chassis	IP20 Open Chassis
Voltage					
240V 1-Phase		20HP	30HP	---	---
240V		25 to 40HP	50 to 60HP	30 to 40HP	50 to 60HP
460V 1-Phase		25HP	50HP	---	---
460V		50 to 75HP	100 to 125HP	60 to 75HP	100 to 125HP
575V		50 to 75HP	100 to 125HP	60 to 75HP	100 to 125HP
Height					
Height of backplate	A	26.78 in	30.31 in	21.65 in	25.98 in
Height with de-coupling plate	A	---	---	24.8 in	31.5 in
Distance between mounting holes	a	25.51 in	29.1 in	20.51 in	24.84 in
Width					
Width of backplate	B	12.13 in	14.57 in	12.13 in	14.57 in
Distance between mounting holes	b	10.71 in	13.15 in	10.63 in	12.99 in
Depth					
Depth without I/O and/or Network Option	C	12.2 in	13.19 in	13.12 in	13.12 in
Depth with I/O and/or Network Option	C	12.2 in	13.19 in	13.12 in	13.12 in
Screw Holes					
	c	0.492 in	0.492 in	---	---
	d	0.748 in	0.748 in	---	---
	e	0.354 in	0.354 in	0.335 in	0.335 in
	f	0.386 in	0.386 in	0.67 in	0.67 in
Weight		99 lbs	143 lbs	77 lbs	110 lbs

Mechanical Dimensions IP20 Open Chassis Drives with Field Installed IP21/NEMA 1 Kits[1]

Unit Size	12	13	23	24	33	34
Drive Type	IP20 Open Chassis with IP21/NEMA 1 Kit	IP20 Open Chassis with IP21/NEMA 1 Kit	IP20 Open Chassis with IP21/NEMA 1 Kit	IP20 Open Chassis with IP21/NEMA 1 Kit	IP20 Open Chassis with IP21/NEMA 1 Kit	IP20 Open Chassis with IP21/NEMA 1 Kit
Voltage						
240V	1 to 3HP	5HP	7.5 to 15HP	20 to 25HP	30 to 40HP	50 to 60HP
460V	1 to 5HP	7.5 to 10HP	15 to 25HP	30 to 50HP	60 to 75HP	100 to 125HP
575V		1 to 10HP	15 to 25HP	30 to 50HP	60 to 75HP	100 to 125HP
Height						
Height with Kit	14.76 in	14.76 in	18.7 in	26.4 in	29.7 in	37.4 in
Width						
Width of backplate	3.71 in	5.12 in	6.5 in	9.1 in	12.1 in	14.6 in
Distance between mounting holes	2.76 in	4.33 in	5.5 in	7.9 in	10.6 in	13.0 in
Depth						
Depth without I/O and/or Network Option	8.07 in	8.07 in	9.81 in	9.53 in	13.3 in	13.3 in
Depth with I/O and/or Network Option	8.67 in	8.67 in	10.31 in	9.53 in	13.3 in	13.3 in

[1]Please consult IP21/NEMA 1 Kit Instructions for further mounting details and dimensions.

Note: Please allow 2" between drives with field installed IP21/NEMA 1 Kits. Also, please consult the relevant AF-6 Series drives Operating Instructions for recommended clearance above and below each drive rating.

AF-600FP™ Fan and Pump Drive
Dimensional Drawings

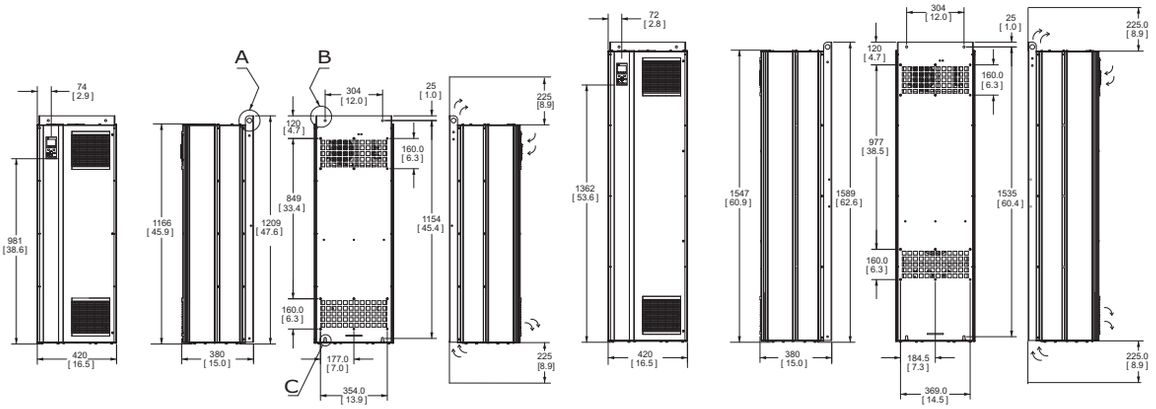

Unit Size 41 IP21 and IP54/UL and NEMA Type 1 and 12 Unit Size 42

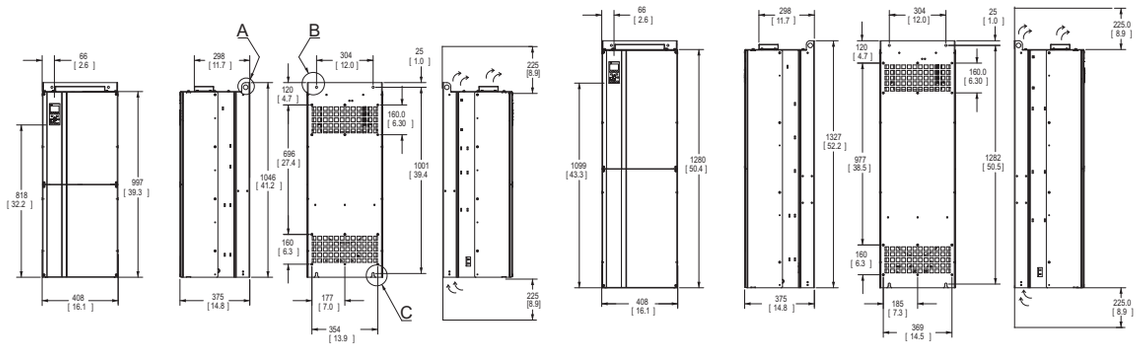

Unit Size 43 IP00/Chassis Unit Size 44

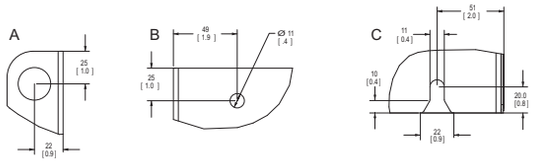

IP00/IP21/IP54—All Sizes

Unit Size	41	42	43	44
Drive Type	NEMA 1/NEMA 12	NEMA 1/NEMA 12	IP00 Open Chassis	IP00 Open Chassis
Voltage				
460V	150 to 200HP	250 to 350HP	150 to 200HP	250 to 350HP
575V	150 to 200HP	250 to 400HP	150 to 200HP	250 to 400HP
Shipping Dimensions				
Height	25.6 in	25.6 in	25.6 in	25.6 in
Width	68.11 in	68.11 in	48.03 in	58.66 in
Depth	22.44 in	22.44 in	22.44 in	22.44 in
Drive Dimensions				
Height	47.6 in	62.56 in	41.18 in	52.24 in
Width	16.54 in	16.54 in	16.06 in	16.06 in
Depth	14.96 in	14.96 in	14.76 in	14.76 in
Weight	228.8 lbs	332.2 lbs	200.2 lbs	303.6 lbs

AF-600FP™ Fan and Pump Drive Dimensional Drawings

Unit Size 51 Dimensions

Drive Type	NEMA 1/NEMA 12
Voltage	
460V	450 to 600HP
575V	450 to 650HP
Shipping Dimensions	
Height	33.1 in
Width	86.5 in
Depth	28.9 in
Drive Dimensions	
Height	78.7 in
Width	23.6 in
Depth	19.4 in
Weight	690 lbs

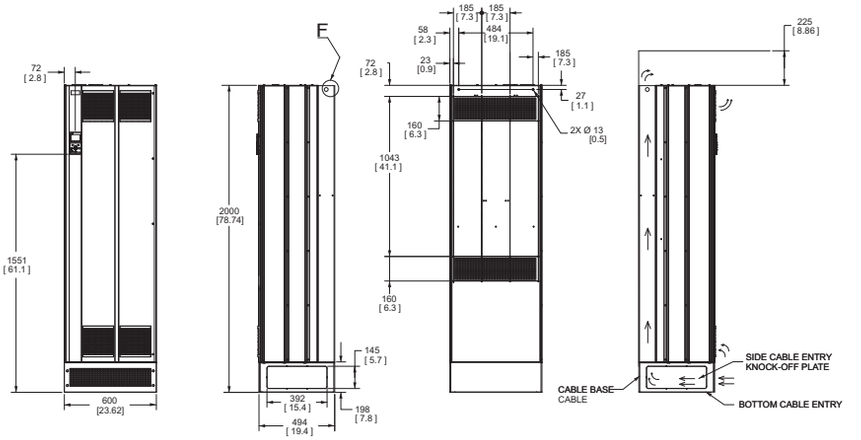

Unit Size 51, IP21 and IP54/UL and NEMA Type 1 and 12

Unit Size 52 Dimensions

Drive Type	IP00 Open Chassis
Voltage	
460V	450 to 600HP
575V	450 to 650HP
Shipping Dimensions	
Height	32.7 in
Width	67.1 in
Depth	28.9 in
Drive Dimensions	
Height	60.9 in
Width	23.1 in
Depth	19.6 in
Weight	610 lbs

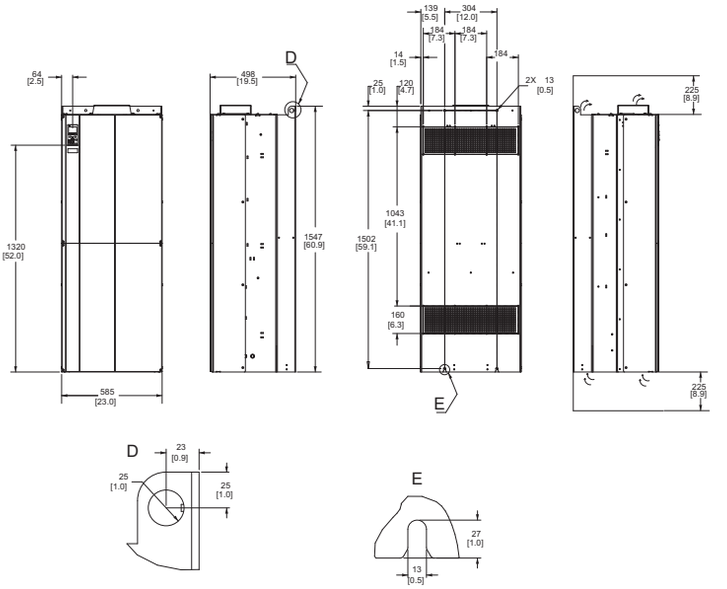

Unit Size 52, IP00/Chassis

Unit Size 61 Dimensions

Drive Type	NEMA 1/NEMA 12
Voltage	
460V	650 to 1000HP
575V	750 to 1050HP
Shipping Dimensions	
Height	91.5 in
Width	61.8 in
Depth	36.5 in
Drive Dimensions	
Height	90 in
Width	55 in
Depth	24 in
Weight	2213 lbs

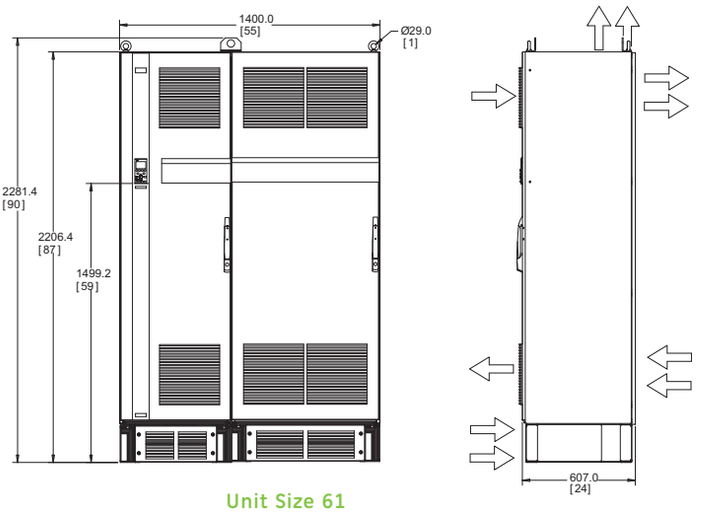

Unit Size 61

AF-600FP™ Fan and Pump Drive
Dimensional Drawings

Unit Size 62 Dimensions

Drive Type	NEMA 1/NEMA 12
Voltage	
460V	1200 to 1350HP
575V	1150 to 1350HP
Shipping Dimensions	
Height	91.5 in
Width	77.2 in
Depth	36.5 in
Drive Dimensions	
Height	90 in
Width	71 in
Depth	24 in
Weight	2782 lbs

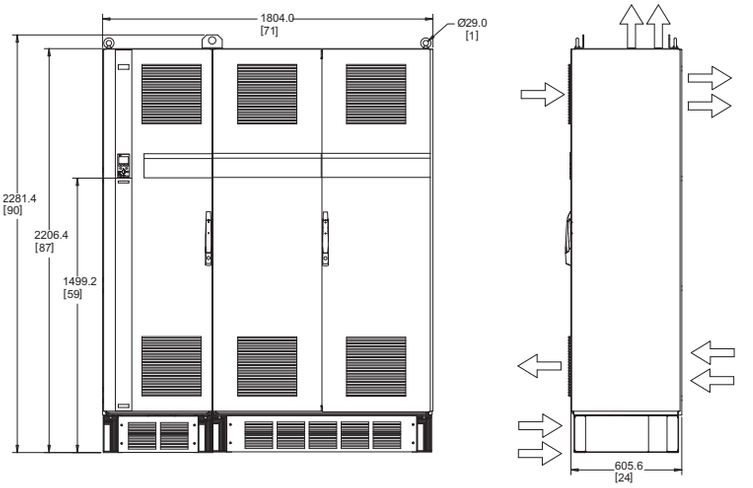

Unit Size 62

Unit Size 63 Dimensions

Drive Type	NEMA 1/NEMA 12
Voltage	
460V	650 to 1000HP
575V	750 to 1050HP
Shipping Dimensions	
Height	91.5 in
Width	85 in
Depth	36.5 in
Drive Dimensions	
Height	90 in
Width	79 in
Depth	24 in
Weight	2864 lbs

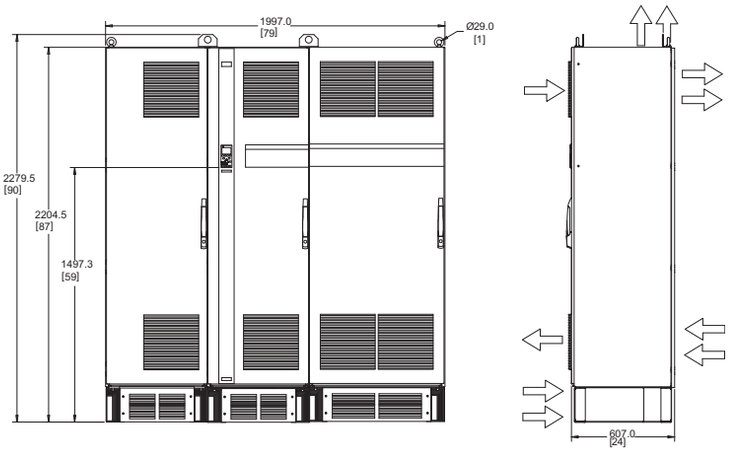

Unit Size 63

Unit Size 64 Dimensions

Drive Type	NEMA 1/NEMA 12
Voltage	
460V	1200 to 1350HP
575V	1150 to 1350HP
Shipping Dimensions	
Height	91.5 in
Width	100.1 in
Depth	36.5 in
Drive Dimensions	
Height	90 in
Width	94.5 in
Depth	24 in
Weight	3397 lbs

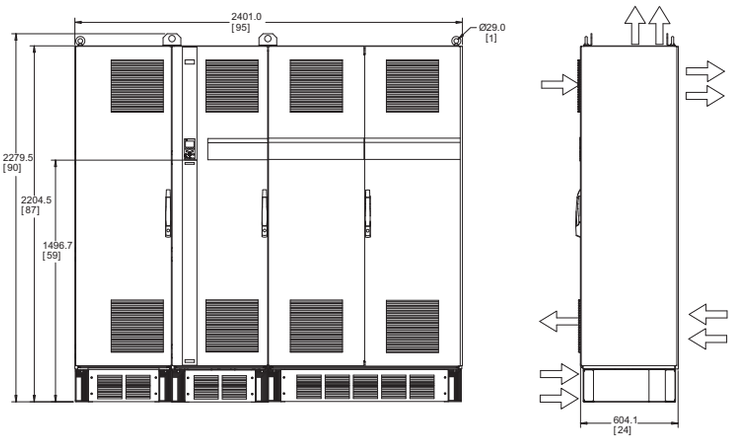

Unit Size 64

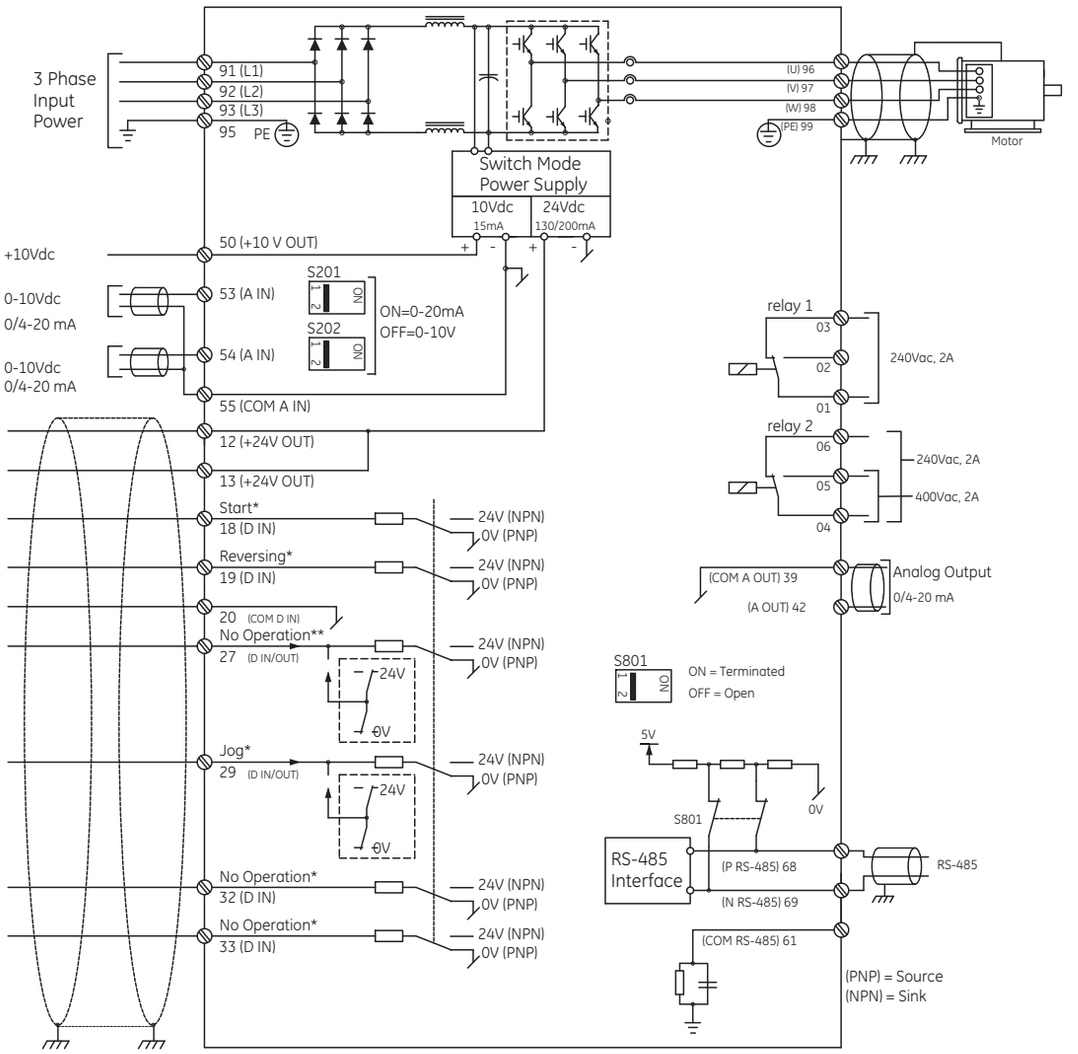

* Indicates default setting; see Parameter Group E-## to re-program.

** Indicates default setting for version 1.10 drives or higher. Prior versions are set to Coast Inverse, indicating that terminal #27 must be Logic "High" to enable the drive to run. See Parameter E-03 Terminal 27 Digital Input to re-program.

AF-600FP™ Fan and Pump Drive
Efficiency, Watt Loss, Unit Size, Dimensions and Weights

230 Vac, 1-Phase, 50/60Hz

HP Rating	Output Current	Efficiency at 5 kHz (%)	Efficiency at 4 kHz (%)	Efficiency at 3 kHz (%)	Watt Loss (W)	GE Unit Size	Drive Type	Height (in)	Width (in)	Depth (in)	Weight (lbs)
2	7.5	98			30	21	IP21/NEMA 1	18.9	9.53	10.24	50.6
3	10.6	98			44	21	IP21/NEMA 1	18.9	9.53	10.24	50.6
5	16.7	98			60	21	IP21/NEMA 1	18.9	9.53	10.24	50.6
7.5	24.2		98		80	21	IP21/NEMA 1	18.9	9.53	10.24	50.6
10	30.8		98		100	22	IP21/NEMA 1	25.6	9.53	10.24	59.5
20	59.4		98		150	31	IP21/NEMA 1	26.78	12.13	12.2	99
30	88			98	200	32	IP21/NEMA 1	30.31	14.57	13.19	143

230 Vac

HP Rating	Output Current	Efficiency at 5 kHz (%)	Efficiency at 4 kHz (%)	Efficiency at 3 kHz (%)	Watt Loss (W)	GE Unit Size	Drive Type	Height (in)	Width (in)	Depth (in)	Weight (lbs)
1	6.6	96			63	12	IP20 Chassis	14.7	3.5	8.7	10.8
2	7.5	96			82	12	IP20 Chassis	14.7	3.5	8.7	10.8
3	10.6	96			116	12	IP20 Chassis	14.7	3.5	8.7	10.8
5	16.7	96			185	13	IP20 Chassis	14.7	5.1	8.7	14.55
7.5	24.2		96		269	23	IP20 Chassis	15.71	6.5	9.13	26.5
10	30.8		96		310	23	IP20 Chassis	15.71	6.5	9.13	26.5
15	46.2		96		447	23	IP20 Chassis	15.71	6.5	9.13	26.5
20	59.4		96		602	24	IP20 Chassis	20.47	9.06	9.41	51.8
25	74.8		96		737	24	IP20 Chassis	20.47	9.06	9.41	51.8
30	88			97	845	33	IP20 Chassis	24.8	12.13	13.15	77.2
40	115			97	1140	33	IP20 Chassis	24.8	12.13	13.15	77.2
50	143			97	1353	34	IP20 Chassis	31.5	14.57	13.15	110.2
60	170			97	1636	34	IP20 Chassis	31.5	14.57	13.15	110.2

460 Vac, 1-Phase, 50/60Hz

HP Rating	Output Current	Efficiency at 5 kHz (%)	Efficiency at 4 kHz (%)	Efficiency at 3 kHz (%)	Watt Loss (W)	GE Unit Size	Drive Type	Height (in)	Width (in)	Depth (in)	Weight (lbs)
10	14.5	96			300	21	IP21/NEMA 1	18.9	9.53	10.24	50.6
15	21		96		440	22	IP21/NEMA 1	25.6	9.53	10.24	59.5
25	34		96		740	31	IP21/NEMA 1	26.78	12.13	12.2	99
50	65			96	1480	32	IP21/NEMA 1	30.31	14.57	13.19	143

460 Vac

HP Rating	Output Current	Efficiency at 5 kHz (%)	Efficiency at 4 kHz (%)	Efficiency at 3 kHz (%)	Efficiency at 2 kHz (%)	Watt Loss (W)	GE Unit Size	Drive Type	Height (in)	Width (in)	Depth (in)	Weight (lbs)
1	2.1	96				58	12	IP20 Chassis	14.7	3.5	8.7	10.8
2	3.4	97				62	12	IP20 Chassis	14.7	3.5	8.7	10.8
3	4.8	97				88	12	IP20 Chassis	14.7	3.5	8.7	10.8
5	8.2	97				124	12	IP20 Chassis	14.7	3.5	8.7	10.8
7.5	11	97				187	13	IP20 Chassis	14.7	5.1	8.7	14.55
10	14.5	97				255	13	IP20 Chassis	14.7	5.1	8.7	14.55
15	21		98			278	23	IP20 Chassis	15.71	6.5	9.13	26.5
20	27		98			392	23	IP20 Chassis	15.71	6.5	9.13	26.5
25	34		98			465	23	IP20 Chassis	15.71	6.5	9.13	26.5
30	40		98			525	24	IP20 Chassis	20.47	9.06	9.41	51.8
40	52		98			698	24	IP20 Chassis	20.47	9.06	9.41	51.8
50	65		98			739	24	IP20 Chassis	20.47	9.06	9.41	51.8
60	80			98		843	33	IP20 Chassis	24.8	12.13	13.15	77.2
75	105			98		1083	33	IP20 Chassis	24.8	12.13	13.15	77.2
100	130			98		1384	34	IP20 Chassis	31.5	14.57	13.15	110.2
125	160			99		1474	34	IP20 Chassis	31.5	14.57	13.15	110.2
150	190			98		3234	43	IP00 Chassis	39.3	16.1	14.7	200.6
200	240			98		3782	43	IP00 Chassis	39.3	16.1	14.7	200.6
250	302			98		4213	44	IP00 Chassis	50.3	16.1	14.7	304.2
300	361			98		5119	44	IP00 Chassis	50.3	16.1	14.7	304.2
350	443			98		5893	44	IP00 Chassis	50.3	16.1	14.7	304.2
450	540				98	7630	52	IP00 Chassis	59	23	19.5	611
500	590				98	7701	52	IP00 Chassis	59	23	19.5	611
550	678				98	8879	52	IP00 Chassis	59	23	19.5	611
600	730				98	9428	52	IP00 Chassis	59	23	19.5	611
650	780				98	10647	61	IP21/NEMA 1	86.8	55.1	23.9	2214
750	890				98	12338	61	IP21/NEMA 1	86.8	55.1	23.9	2214
900	1050				98	13201	61	IP21/NEMA 1	86.8	55.1	23.9	2214
1000	1160				98	15436	61	IP21/NEMA 1	86.8	55.1	23.9	2214
1200	1380				98	18084	62	IP21/NEMA 1	86.8	71	23.9	2748
1350	1530				98	20358	62	IP21/NEMA 1	86.8	71	23.9	2748

AF-600FP™ Fan and Pump Drive
Efficiency, Watt Loss, Unit Size, Dimensions and Weights

525 – 600 Vac

HP Rating	Output Current	Efficiency at 5 kHz (%)	Efficiency at 3 kHz (%)	Efficiency at 2 kHz (%)	Efficiency at 1.5 kHz (%)	Watt Loss (W)	GE Unit Size	Drive Type	Height (in)	Width (in)	Depth (in)	Weight (lbs)
1	2.4	97				50	13	IP20 Chassis	14.7	5.1	8.7	14.55
2	2.7	97				65	13	IP20 Chassis	14.7	5.1	8.7	14.55
3	3.9	97				92	13	IP20 Chassis	14.7	5.1	8.7	14.55
5	6.1	97				145	13	IP20 Chassis	14.7	5.1	8.7	14.55
7.5	9	97				195	13	IP20 Chassis	14.7	5.1	8.7	14.55
10	11	97				261	13	IP20 Chassis	14.7	5.1	8.7	14.55
15	18		98			300	23	IP20 Chassis	15.71	6.5	9.13	26.5
20	22		98			400	23	IP20 Chassis	15.71	6.5	9.13	26.5
25	27		98			475	23	IP20 Chassis	15.71	6.5	9.13	26.5
30	34		98			525	24	IP20 Chassis	20.47	9.06	9.41	51.8
40	41		98			700	24	IP20 Chassis	20.47	9.06	9.41	51.8
50	52		98			750	24	IP20 Chassis	20.47	9.06	9.41	51.8
60	62			98		850	33	IP20 Chassis	24.8	12.13	13.15	77.2
75	83			98		1100	33	IP20 Chassis	24.8	12.13	13.15	77.2
100	100			98		1400	34	IP20 Chassis	31.5	14.57	13.15	110.2
125	131			98		1500	34	IP20 Chassis	31.5	14.57	13.15	110.2
150	155			98		3114	43	IP00 Chassis	39.3	16.1	14.7	180.8
200	192			98		3612	43	IP00 Chassis	39.3	16.1	14.7	180.8
250	242			98		4293	44	IP00 Chassis	50.3	16.1	14.7	246.9
300	290			98		5156	44	IP00 Chassis	50.3	16.1	14.7	246.9
350	344			98		5821	44	IP00 Chassis	50.3	16.1	14.7	246.9
400	400				98	6149	44	IP00 Chassis	50.3	16.1	14.7	246.9
450	450				98	6449	52	IP00 Chassis	59	23	19.5	487.2
500	500				98	7249	52	IP00 Chassis	59	23	19.5	487.2
600	570				98	8727	52	IP00 Chassis	59	23	19.5	487.2
650	630				98	9673	52	IP00 Chassis	59	23	19.5	487.2
750	730				98	11315	61	IP21/NEMA 1	86.8	55.1	23.9	2213.4
950	850				98	12903	61	IP21/NEMA 1	86.8	55.1	23.9	2213.4
1050	945				98	14533	61	IP21/NEMA 1	86.8	55.1	23.9	2213.4
1150	1060				98	16375	62	IP21/NEMA 1	86.8	71	23.9	2746.9
1350	1260				98	19207	62	IP21/NEMA 1	86.8	71	23.9	2746.9

AF-600FP™ Fan and Pump Drive Standard Specifications

Environmental Conditions

Enclosures	IP20 Chassis, IP00 Chassis, IP21/NEMA 1, IP55/NEMA 12, IP54/NEMA 12
Plenum Ratings	Drives and options are UL rated for installation inside air handling ducts and plenums
Installation Location	Do not install in locations where product could be exposed to dust, corrosive gas, inflammable gas, oil mist, vapor, water drops or direct sunlight. There must be no salt in the atmosphere. Condensation must not be caused by sudden changes in temperature. For use at altitudes of 3280 ft. (1000M) or less without derating.
Storage Temperature	-25° to 65°C
Ambient Temperature	-10° to +50°C (24 hour average max of 45°C)
Ambient Humidity	5 to 95% RH (non-condensing)
Vibration	1.0g
Cooling Method	Fan Cooled all ratings. Fan Control Auto, 50% level, 75% level, 100% level adjustable

Standard

Approvals	CE, UL, cUL, and C-Tick Suitable for use on a circuit capable of delivering not more than 100,000 rms symmetrical amperes for 208/230V and 460V.

Input Power Supply

Rated Input AC Voltage	200-240 Vac, 3-phase, 50-60 Hz, +/- 10% V 380-480 Vac, 3-phase, 50-60 Hz, +/- 10% V 525-600 Vac, 3-phase, 50-60 Hz, +/- 10% V
Maximum Voltage Imbalance	3% of rated supply voltage
True Power Factor	> 0.9 nominal at rated load
Displacement Power Factor	> 0.98
Switching on input power supply	Maximum twice/minute up to 10HP, Maximum once/minute above 10HP
Environment according to EN60664-1	Overvoltage category III/pollution degree 2
DC Link Reactors	Built-In DC Link Reactors on all ratings
RFI Filters	Built-In RFI Filters to reduce noise generated by the drive. Meets industrial standards.

Output

Rated Output Voltage	0-100% of supply voltage
Output Frequency	0-1000 Hz; 0-800Hz for 460V above 125HP and 525-690 V above 125HP
Switching on output	Unlimited
Accel/Decel Times	1-3600 seconds
Control Method	Sinusoidal PWM Control (V/Hz, Avd. Vector Control)

Control

Starting Torque	110% starting torque for 1 minute (variable torque)
Carrier Frequency (Motor Noise)	Selectable - 1, 1.5, 2, 2.5, 3, 3.5, 4, 5, 6, 7, 8, 10, 12, 14, 16 kHz
Torque Boost	0 - 300% setting to compensate voltage in relation to the load at low speed
Acceleration/Deceleration Time	0.01-3600 seconds (4 acceleration and deceleration times are selectable via digital inputs. Acceleration and deceleration patterns can be selected from linear or S-curve)
Data Protection	Password Protection for Quick Menu or Main Menu, 0-9999.
Pattern Operation	Settings via Built-In Logic Controller Sequencer
Jump Frequency Control	4 jump (or skip) frequencies via parameter set to avoid mechanical vibration
Slip Compensation	Maintains motor at constant speed with load fluctuations
Torque Limit Control	Output torque can be controlled within a range of 0.0 to 110% (0.1 and steps)
8 Preset Speeds	8 programmable preset speeds selectable by 3 digital inputs
Preset Speeds	8 presets via digital inputs
Built-In Communications	Drive RS-485, Modbus RTU, Metasys N2, or Apogee FLN P1
Trim Reference Setting	Available for speed reference offset via potentiometer, voltage input, or current input
DC Injection Braking	Starting frequency: 0.0-1000 Hz, 0-800Hz for 460V above 125HP and 525-690 V above 125HP Braking time: 0.0-60.0 seconds Braking level: 0-100% of rated current
Jogging Operation	Operation via On key or digital input (Fwd or Rev)
Auto-Restart After Power Failure	Restarts the drive without stopping after instantaneous power failure
Energy Savings	Controls output voltage to minimize motor loss during constant speed operation
Start Mode Function	This functionality smoothly catches a spinning motor
Fire Override Mode	Overrides drive's protective features and keeps motor running
Pump Cascade Controller	Distributes running hours evenly over up to 4 pumps
Sleep Mode	Drive detects low or no flow conditions and adjusts output
Dry Pump Detection	Detects pump operation and can set off alarm, shuts off, or other programmed actions
Belt Monitoring	Drive can detect relationship between current and speed to recognize a broken belt
Real Time Clock	With programmable timed actions

Logic Controller (LC) Sequencer

Logic Controller Events	Upto 38 Programmable Events
Comparators	Array of 6 Comparators
Timers	Array of 8 Timers, adjustable from 0.0 to 3600 sec
Logic Rules	Array of 6 Boolean Logic Rules
Logic Controller States	Array of 20 Logic Controller Action States

Process Controller (PID)

Process PID Controller	4 Auto Tune PID Controllers Built-In
Process CL Feedback Select	Up to 2 references. Selectable - No function, Motor Feedback, Separate Encoder, Encoder Option Module, or Resolver Option Module
Process PID Control	Normal or Inverse
Process PID Anti Windup	Disabled or enabled
Process PID Start Speed	0.0-200 Hz
Process PID Proportional Gain	0.00-10.00
Process PID Integral Time	0.1 - 10000.0 ms
Process PID Differential Time	0.0 - 10 s
Process PID Differential Gain	1.0-50.00
Process PID Feed Forward Factor	0-500%
On Reference Bandwidth	0-200%

AF-600FP™ Fan and Pump Drive
Standard Specifications

Operation

Operation Method	Keypad operation: Hand, Off, Auto Digital Input: Programmable for Start/Stop, Forward/Reverse, Jog Timer operation: Stop after predetermined time frame Communications: RS-485 Modbus RTU, Metasys N2, and Apogee FLN P1 USB Port for programming drive with optional PC Software
Frequency Reference Signal	Left or Right Arrow buttons on keypad in Manual Mode Speed Potentiometer: 0 to +10 Vdc, 10 to 0 Vdc 0-10Vdc analog input 0/4-20ma analog input
References	Up to 3 Input References can be selected from Analog Input #1 or #2, Frequency Input #1 or #2, Network, or Potentiometer
Digital Input Signal	No Operation Reset after drive trip or alarm Drive at stop with no holding current Quick Stop according to Quick Stop Decel Time 1 Stop on input going low Start Maintained Start arfter signal applied for Minimum of 2ms Reversing Start Reverse Enable Start Forward only Enable Start Reverse only Jog Multi-Step Frequency selection (1 to 8 Steps) Hold Drive Frequency Hold Reference Speed Up; activated by Hold Drive Frequency or Hold Reference Slow Down; activated by Hold Drive Frequency or Hold Reference Drive Parameter Setup Select 1-4 Precise Start or Stop; Activated when drive parameter precise start or stop function is selected Catch Up or Slow Down; Activated by signal to add to or subtract from input reference to control speed Pulse Input selectable from 100 - 110000Hz Accel / Decel Time select. Set Input to Accel / Decel Times 1 to 4 Digital Potentiometer Input Increase or Decrease Mechanical Brake Feedback

Keypad

Keypad Features	LCD Display with 6 Alpha-numeric lines. Multi-Language Support Hot Pluggable, Remote Mount Option, and CopyCat Feature, IP65 rating when remote mounted on enclosure LED's - Green - drive is on, Yellow - indicates a warning, Red - indicates an alarm, Amber - Indicates active Menukeys and H-O-A keys
Keypad Keys	Status - shows status of drive Quick Menu - Enters Quick Start, Parameter Data Check, or Trending Modes Main Menu - Used for programming all drive parameters Alarm Log - Used to display Alarm list Back - Reverts to previous step or layer in parameter structure Cancel - Used to cancel last change or command Info - Displays information about a command, parameter, or function in any display. Hand/Off/Auto - Used to control drive locally or put drive in remote mode Reset - Used to reset Warnings or Alarms
Password	2 Level Password Protection
Alternate Motor Parameters	Up to 4 Separate complete parameter set-ups are available
Graphical Trending	Trend - Speed, Power, or Frequency

RS485 Modbus RTU Serial Communications

Physical Level:	EIA/RS485
Transmission distance:	1640 ft (500m)
Node Address:	32
Transmission Speed:	2400, 4800, 9600, 19200, 38400, or 115200 (bits/s)
Transmission Mode:	Half Duplex
Transmission Protocol:	Modbus RTU
Character Code:	Binary
Character Length:	8 Bits
Error Check:	CRC

Mounting Clearance

All AF-650GP™ drives can be mounted Side-by-Side without spacing. For all drives rated 125HP or below allow 3.4 inches (100mm) free space above and below. For all drives rated 150HP and above allow 8.9 inches (225mm) free space above and below.

AF-600FP™ Fan and Pump Drive
Replacement Parts

IP 20 - 230 Vac, 3-Phase, 50/60Hz Input
IP 55/66 - 230 Vac, 3-Phase, 50/60Hz Input

Product Number	List Price GO-5RP	Description	Unit Size	Rating	Drive Hp and Quantity Per Drive 1	2	3	5	7.5	10	15	20	25	30	40	50	60
Main Control Card																	
6KAF61151	**$950.00**	Control Card	-	-	1	1	1	1	1	1	1	1	1	1	1	1	1
Keypad																	
KYPDACGP1	**$500.00**	Replacement Graphical Keypad	-	-	1	1	1	1	1	1	1	1	1	1	1	1	1
6KAF61007	**$45.00**	Frame w/o option A or B	12/13/23	-	1	1	1	1	1	1	1						
6KAF61008	**$60.00**	Frame w option A or B	12/13/23	-	1	1	1	1	1	1	1						
6KAF60284	**$75.00**	Frame	24/33/34	-								1	1	1	1	1	1
6KAF63414	**$40.00**	Frame	15/21/22/31/32	-	1	1	1	1	1	1	1	1	1	1	1	1	1
6KAF61011	**$40.00**	Terminal cover w/o option A or B	12/13	-	1	1	1	1									
6KAF61012	**$40.00**	Terminal cover w option A or B	12/13	-	1	1	1	1									
6KAF61411	**$65.00**	Terminal cover w/o option A or B	23	-					1	1	1						
6KAF61410	**$95.00**	Terminal cover w option A or B	23	-					1	1	1						
Power Card																	
6KAF61801	**$3830.00**	Power Card	21	-					1								
6KAF61802	**$3830.00**	Power Card	21	-						1							
6KAF61803	**$4285.00**	Power Card	21	-							1						
6KAF61805	**$4835.00**	Power Card	22	-								1					
6KAF61807	**$1550.00**	Power Card	31	-									1				
6KAF61808	**$1550.00**	Power Card	31	-										1			
6KAF61809	**$1550.00**	Power Card	31	-											1		
6KAF61810	**$1735.00**	Power Card	32	-												1	
6KAF61811	**$1735.00**	Power Card	32	-													1
6KAF61901	**$3830.00**	Power Card	23	-					1								
6KAF61902	**$3830.00**	Power Card	23	-						1							
6KAF61903	**$4285.00**	Power Card	23	-							1						
6KAF61906	**$4835.00**	Power Card	24	-								1					
6KAF61907	**$5020.00**	Power Card	24	-									1				
6KAF61916	**$1825.00**	Power Card	33	-										1			
6KAF61917	**$1825.00**	Power Card	33	-											1		
6KAF61918	**$1920.00**	Power Card	34	-												1	
6KAF61919	**$1920.00**	Power Card	34	-													1
6KAF61806	**$2010.00**	Switch Mode Power Supply	22	-								1					
Inverter IGBTs																	
6KAF61884	**$1510.00**	Dual IGBT Module	31/33	150A									3	3			
6KAF61885	**$1895.00**	Dual IGBT Module	31/33	200A											3		
6KAF61886	**$2600.00**	Dual IGBT Module	32/34	300A												3	3
Brake IGBT																	
6KAF61884	**$1510.00**	Dual IGBT Module	31/33	150A									1	1	1		
6KAF61400	**$2105.00**	Dual IGBT Module	32/34	200A												1	
6KAF61886	**$2595.00**	Dual IGBT Module	32/34	300A													1
Rectifiers																	
6KAF61887	**$820.00**	Thyristor Module	31/33	180A									3	3	3		
6KAF61888	**$1130.00**	Thyristor Module	32/34	240A												3	3
RFI Filters																	
6KAF63378	**$680.00**	RFI Filter (class A2)	21	-					1	1	1						
6KAF63381	**$685.00**	RFI Filter (class A2)	22	-								1					
6KAF63427	**$40.00**	RFI Filter (class A2)	31	-									1	1	1		
6KAF63377	**$1235.00**	RFI Filter (class A1/B)	21	-					1	1	1						
6KAF63380	**$1495.00**	RFI Filter (class A1/B)	22	-								1					
6KAF63425	**$4265.00**	RFI Filter (class A1/B)	31	-									1	1	1		
6KAF63422	**$4750.00**	RFI Filter (class A1/B)	32	-												1	1
6KAF61412	**$1325.00**	RFI Filter (class A1/B)	23	-					1	1	1						
6KAF61416	**$1535.00**	RFI Filter (class A1/B)	24	-								1	1				
6KAF61419	**$2565.00**	RFI Filter (class A1/B)	33	-										1	1		
6KAF61420	**$3185.00**	RFI Filter (class A1/B)	34	-												1	1
Current Transducers																	
6KAF61896	**$1580.00**	Current Transducer Card	31/33	-									1	1	1		
6KAF61895	**$1580.00**	Current Transducer Card	32/34	-												1	1
DC Link																	
6KAF65160	**$910.00**	DC Capacitors	31	3700uF									2				
6KAF65159	**$1050.00**	DC Capacitors	31	4500uF										2			
6KAF65158	**$1275.00**	DC Capacitors	31	5300uF											2		
6KAF65157	**$825.00**	DC Capacitors	32	3700uF												2	
6KAF65156	**$1030.00**	DC Capacitors	32	4500uF													2
6KAF61423	**$1440.00**	DC Capacitors	33/34	4500uF										2	2	2	2
6KAF61060	**$1200.00**	DC Link Reactors	21	780mH					1	1							
6KAF61062	**$1260.00**	DC Link Reactors	22	490mH							1						
6KAF61063	**$1385.00**	DC Link Reactors	22	410mH								1					
6KAF61035	**$2205.00**	DC Link Reactors	31	300mH									1				
6KAF61036	**$2630.00**	DC Link Reactors	31	260mH										1			
6KAF61037	**$2960.00**	DC Link Reactors	31	200mH											1		
6KAF61038	**$3535.00**	DC Link Reactors	32	170mH												1	
6KAF61039	**$4090.00**	DC Link Reactors	32	100mH													1
6KAF61950	**$1355.00**	DC Link Assembly	24	-								1					
6KAF61951	**$1600.00**	DC Link Assembly	24	-									1				

AF-600FP™ Fan and Pump Drive
Replacement Parts

IP 20 - 230 Vac, 3-Phase, 50/60Hz Input (continued)
IP 55/66 - 230 Vac, 3-Phase, 50/60Hz Input (continued)

Product Number	List Price GO-5RP	Description	Unit Size	Rating	Drive Hp and Quantity Per Drive 1	2	3	5	7.5	10	15	20	25	30	40	50	60
Fans																	
6KAF61009	**$160.00**	Fan Assembly	12	-	1	1	1										
6KAF61010	**$160.00**	Fan Assembly	13	-				1									
6KAF61017	**$295.00**	Fan Assembly	15	-	1	1	1	1									
6KAF63563	**$270.00**	External Fan (IP20)	23	12W					1	1	1						
6KAF63699	**$250.00**	External Fan (IP20)	24	12W								1					
6KAF64292	**$250.00**	External Fan (IP20)	33	12W									2	2	2		
6KAF64294	**$355.00**	External Fan (IP20)	34	18W												2	2
6KAF63407	**$455.00**	External Fan (IP55)	21	22W					1	1	1						
6KAF63406	**$640.00**	External Fan (IP55)	22	22W								1					
6KAF63865	**$645.00**	External Fan (IP55)	31	26W									1	1	1		
6KAF63867	**$1235.00**	External Fan (IP55)	32	22W												1	1
6KAF63440	**$100.00**	Internal Fan	21/23	5.8W					1	1	1						
6KAF63441	**$100.00**	Internal Fan	22/24	5.8W								1	1				
6KAF63923	**$110.00**	Internal Fan	31/32/33/34	5.8W									1	1	1	1	1
Accessory Bags																	
6KAF61022	**$275.00**	Connectors Accessory Bag	12/13	-	1	1	1	1									
6KAF61023	**$240.00**	Connectors Accessory Bag	15	-	1	1	1	1									
6KAF62060	**$120.00**	Connectors Accessory Bag	21	-					1	1	1						
6KAF62061	**$125.00**	Connectors Accessory Bag	22	-								1					
6KAF60980	**$140.00**	Connectors Accessory Bag	23	-					1	1	1						
6KAF61300	**$270.00**	Connectors Accessory Bag	24	-								1	1				
6KAF60046	**$200.00**	Connectors Accessory Bag	31	-									1	1	1		
6KAF60047	**$210.00**	Connectors Accessory Bag	32	-												1	1
6KAF60981	**$225.00**	Connectors Accessory Bag	33	-										1	1		
6KAF60982	**$270.00**	Connectors Accessory Bag	34	-												1	
6KAF60983	**$270.00**	Connectors Accessory Bag	34	-													1
6KAF60633	**$55.00**	Brake and Load Sharing Connectors Bag	12/13/15	-	1	1	1	1									

IP 20 - 460 Vac, 3-Phase, 50/60Hz Input
IP 55/66 - 460 Vac, 3-Phase, 50/60Hz Input

Product Number	List Price GO-5RP	Description	Unit Size	Rating	Drive Hp and Quantity Per Drive 1	2	3	5	7.5	10	15	20	25	30	40	50	60	75	100	125
Main Control Card																				
6KAF61151	**$950.00**	Control Card	-	-	1	1	1	1	1	1	1	1	1	1	1	1	1	1	1	1
Keypad																				
KYPDACGP1	**$500.00**	Replacement Graphical Keypad	-	-	1	1	1	1	1	1	1	1	1	1	1	1	1	1	1	1
6KAF61007	**$45.00**	Frame w/o option A or B	12/13/23	-	1	1	1	1	1	1	1	1	1							
6KAF61008	**$60.00**	Frame w option A or B	12/13/23	-	1	1	1	1	1	1	1	1	1							
6KAF60284	**$75.00**	Frame	24/33/34	-										1	1	1	1	1	1	1
6KAF63414	**$40.00**	Frame	15/21/22/31/32	-	1	1	1	1	1	1	1	1	1	1	1	1	1	1	1	1
6KAF61011	**$40.00**	Terminal cover w/o option A or B	12/13	-	1	1	1	1	1	1										
6KAF61012	**$40.00**	Terminal cover w option A or B	12/13	-	1	1	1	1	1	1										
6KAF61411	**$65.00**	Terminal cover	23	-							1	1	1							
6KAF61410	**$95.00**	Terminal cover	23	-							1	1	1							
Power Card																				
6KAF61820	**$3830.00**	Power Card	21	-							1									
6KAF61821	**$3830.00**	Power Card	21	-								1								
6KAF61822	**$4285.00**	Power Card	21	-									1							
6KAF61823	**$4380.00**	Power Card	22	-										1						
6KAF61825	**$4835.00**	Power Card	22	-											1					
6KAF61827	**$1550.00**	Power Card	31	-												1				
6KAF61828	**$1550.00**	Power Card	31	-													1			
6KAF61829	**$1550.00**	Power Card	31	-														1		
6KAF61830	**$1735.00**	Power Card	32	-															1	
6KAF61831	**$1735.00**	Power Card	32	-																1
6KAF61920	**$3830.00**	Power Card	23	-							1									
6KAF61921	**$3830.00**	Power Card	23	-								1								
6KAF61922	**$4285.00**	Power Card	23	-									1							
6KAF61924	**$4380.00**	Power Card	24	-										1						
6KAF61926	**$4835.00**	Power Card	24	-											1					
6KAF61927	**$5020.00**	Power Card	24	-												1				
6KAF61936	**$1825.00**	Power Card	33	-													1			
6KAF61937	**$1825.00**	Power Card	33	-														1		
6KAF61938	**$1920.00**	Power Card	34	-															1	
6KAF61939	**$1920.00**	Power Card	34	-																1
6KAF61824	**$2010.00**	Switch Mode Power Supply	22	-										1						
6KAF61826	**$2010.00**	Switch Mode Power Supply	22	-											1					

AF-600FP™ Fan and Pump Drive Replacement Parts

IP 20 - 460 Vac, 3-Phase, 50/60Hz Input (continued)
IP 55/66 - 460 Vac, 3-Phase, 50/60Hz Input (continued)

Product Number	List Price GO-5RP	Description	Unit Size	Rating	Drive Hp and Quantity Per Drive															
					1	2	3	5	7.5	10	15	20	25	30	40	50	60	75	100	125
Inverter IGBTs																				
6KAF61884	**$1510.00**	Dual IGBT Module	31/33	150A												3	3			
6KAF61885	**$1895.00**	Dual IGBT Module	31/33	200A														3		
6KAF61886	**$2600.00**	Dual IGBT Module	32/34	300A															3	3
Brake IGBT																				
6KAF61884	**$1510.00**	Dual IGBT Module	31/33	150A												1	1	1		
6KAF61400	**$2105.00**	Dual IGBT Module	32/34	200A															1	
6KAF61886	**$2595.00**	Dual IGBT Module	32/34	300A																1
Rectifiers																				
6KAF61887	**$820.00**	Thyristor Module	31/33	180A												3	3	3		
6KAF61888	**$1130.00**	Thyristor Module	32/34	240A															3	3
RFI Filters																				
6KAF63378	**$680.00**	RFI Filter (class A2)	21	-							1	1	1							
6KAF63381	**$685.00**	RFI Filter (class A2)	22	-										1	1					
6KAF63427	**$40.00**	RFI Filter (class A2)	31	-												1	1	1		
6KAF63377	**$1235.00**	RFI Filter (class A1/B)	21	-							1	1	1							
6KAF63380	**$1495.00**	RFI Filter (class A1/B)	22	-										1	1					
6KAF63425	**$4265.00**	RFI Filter (class A1/B)	31	-												1	1	1		
6KAF63422	**$4750.00**	RFI Filter (class A1/B)	32	-															1	1
6KAF61412	**$1325.00**	RFI Filter (class A1/B)	23	-							1	1	1							
6KAF61416	**$1535.00**	RFI Filter (class A1/B)	24	-										1	1	1				
6KAF61419	**$2565.00**	RFI Filter (class A1/B)	33	-													1	1		
6KAF61420	**$3185.00**	RFI Filter (class A1/B)	34	-															1	1
Current Transducers																				
6KAF61894	**$1310.00**	Current Transducer Card	31/33	-												1	1	1		
6KAF61897	**$1620.00**	Current Transducer Card	32/34	-															1	1
DC Link																				
6KAF65160	**$910.00**	DC Capacitors	31/32	3700uF												2				
6KAF65159	**$1050.00**	DC Capacitors	31/32	4500uF													2			
6KAF65158	**$1275.00**	DC Capacitors	31/32	5300uF														2		
6KAF65157	**$825.00**	DC Capacitors	31/32	3700uF															2	
6KAF65156	**$1030.00**	DC Capacitors	31/32	4500uF																2
6KAF61421	**$1625.00**	DC Capacitors	33/34	5300uF														2		
6KAF61422	**$675.00**	DC Capacitors	33/34	3700uF															2	
6KAF61423	**$1440.00**	DC Capacitors	33/34	4500uF													2			2
6KAF61060	**$1200.00**	DC Link Reactors	21	780mH							1	1								
6KAF61061	**$1260.00**	DC Link Reactors	21	580mH									1							
6KAF61062	**$1260.00**	DC Link Reactors	22	490mH										1						
6KAF61063	**$1385.00**	DC Link Reactors	22	410mH											1					
6KAF61035	**$2205.00**	DC Link Reactors	31	300mH												1				
6KAF61036	**$2630.00**	DC Link Reactors	31	260mH													1			
6KAF61037	**$2960.00**	DC Link Reactors	31	200mH														1		
6KAF61038	**$3535.00**	DC Link Reactors	32	170mH															1	
6KAF61039	**$4090.00**	DC Link Reactors	32	100mH																1
6KAF61954	**$2015.00**	DC Link Assembly	24	-										1						
6KAF61955	**$2500.00**	DC Link Assembly	24	-											1	1				
Fans																				
6KAF61009	**$160.00**	Fan Assembly	12	-	1	1	1	1												
6KAF61010	**$160.00**	Fan Assembly	13	-					1	1										
6KAF61017	**$295.00**	Fan Assembly	15	-	1	1	1	1	1	1										
6KAF63563	**$270.00**	External Fan (IP20)	23	12W							1	1	1							
6KAF63699	**$250.00**	External Fan (IP20)	24	12W										1	1	1				
6KAF64292	**$250.00**	External Fan (IP20)	33	12W													2	2		
6KAF64294	**$355.00**	External Fan (IP20)	34	18W															2	2
6KAF63407	**$455.00**	External Fan (IP55)	21	22W							1	1	1							
6KAF63406	**$640.00**	External Fan (IP55)	22	22W										1	1					
6KAF63865	**$645.00**	External Fan (IP55)	31	26W												1	1	1		
6KAF63867	**$1235.00**	External Fan (IP55)	32	22W															1	1
6KAF63440	**$100.00**	Internal Fan	21/23	5.8W							1	1	1							
6KAF63441	**$100.00**	Internal Fan	22/24	5.8W										1	1	1				
6KAF63923	**$110.00**	Internal Fan	31/32/33/34	5.8W												1	1	1	1	1
Accessory Bags																				
6KAF61022	**$275.00**	Connectors Accessory Bag	12/13	-	1	1	1	1	1	1										
6KAF61023	**$240.00**	Connectors Accessory Bag	15	-	1	1	1	1	1	1										
6KAF62060	**$120.00**	Connectors Accessory Bag	21	-							1	1	1							
6KAF62061	**$125.00**	Connectors Accessory Bag	22	-										1	1					
6KAF60980	**$140.00**	Connectors Accessory Bag	23	-							1	1	1							
6KAF61300	**$270.00**	Connectors Accessory Bag	24	-										1	1	1				
6KAF60046	**$200.00**	Connectors Accessory Bag	31	-												1	1	1		
6KAF60047	**$210.00**	Connectors Accessory Bag	32	-															1	1
6KAF60981	**$225.00**	Connectors Accessory Bag	33	-													1	1		
6KAF60982	**$270.00**	Connectors Accessory Bag	34	-															1	
6KAF60983	**$270.00**	Connectors Accessory Bag	34	-																1
6KAF60633	**$55.00**	Brake and Load Sharing Connectors Bag	12/13/15	-	1	1	1	1	1	1										

AF-600FP™ Fan and Pump Drive
Replacement Parts

IP 20 - 575 Vac, 3-Phase, 50/60Hz Input
IP 55/66 - 575 Vac, 3-Phase, 50/60Hz Input

Product Number	List Price GO-5RP	Description	Unit Size	Rating	Drive Hp and Quantity Per Drive															
					1	2	3	5	7.5	10	15	20	25	30	40	50	60	75	100	125
Main Control Card																				
6KAF61151	**$950.00**	Control Card	-	-	1	1	1	1	1	1	1	1	1	1	1	1	1	1	1	1
Keypad																				
KYPDACGP1	**$500.00**	Replacement Graphical Keypad	-	-	1	1	1	1	1	1	1	1	1	1	1	1	1	1	1	1
6KAF61007	**$45.00**	Frame w/o option A or B	12/13/23	-	1	1	1	1	1	1	1	1	1							
6KAF61008	**$60.00**	Frame w option A or B	12/13/23	-	1	1	1	1	1	1	1	1	1							
6KAF60284	**$75.00**	Frame	24/33/34	-										1	1	1	1	1	1	1
6KAF63414	**$40.00**	Frame	15/21/22/31/32	-	1	1	1	1	1	1	1	1	1	1	1	1	1	1	1	1
6KAF61011	**$40.00**	Terminal cover w/o option A or B	12/13	-	1	1	1	1	1	1										
6KAF61012	**$40.00**	Terminal cover w option A or B	12/13	-	1	1	1	1	1	1										
6KAF61411	**$65.00**	Terminal cover	23	-							1	1	1							
6KAF61410	**$95.00**	Terminal cover	23	-							1	1	1							
Power Card																				
6KAF61857	**$5020.00**	Power Card	21	-							1									
6KAF61858	**$5020.00**	Power Card	21	-								1								
6KAF61859	**$5020.00**	Power Card	21	-									1							
6KAF61935	**$5200.00**	Power Card	22	-										1						
6KAF61940	**$5200.00**	Power Card	22	-											1					
6KAF61928	**$1735.00**	Power Card	31	-												1				
6KAF61929	**$1735.00**	Power Card	31	-													1			
6KAF61930	**$1735.00**	Power Card	31	-														1		
6KAF61931	**$1920.00**	Power Card	32	-															1	
6KAF61932	**$1920.00**	Power Card	32	-																1
6KAF61960	**$4925.00**	Power Card	23	-							1									
6KAF61961	**$2925.00**	Power Card	23	-								1								
6KAF61962	**$5110.00**	Power Card	23	-									1							
6KAF61963	**$5200.00**	Power Card	24	-										1						
6KAF61964	**$5300.00**	Power Card	24	-											1					
6KAF61965	**$5390.00**	Power Card	24	-												1				
6KAF61966	**$1825.00**	Power Card	33	-													1			
6KAF61967	**$1825.00**	Power Card	33	-														1		
6KAF61968	**$1920.00**	Power Card	34	-															1	
6KAF61969	**$1920.00**	Power Card	34	-																1
6KAF61875	**$2085.00**	Switch Mode Power Supply	22	-										1						
6KAF61876	**$2085.00**	Switch Mode Power Supply	22	-											1					
Inverter IGBTs																				
6KAF61403	**$1475.00**	Dual IGBT Module	31/33	100A												3	3			
6KAF61409	**$1745.00**	Dual IGBT Module	31/33	150A														3		
6KAF61404	**$2400.00**	Dual IGBT Module	32/34	200A															3	
6KAF61432	**$3950.00**	Dual IGBT Module	32/34	300A																3
Brake IGBT																				
6KAF61403	**$1475.00**	Dual IGBT Module	31/33	100A													1	1		
6KAF61404	**$2400.00**	Dual IGBT Module	31/33	200A															1	1
Rectifiers																				
6KAF61429	**$1165.00**	Thyristor Module	31/33	115A												3	3	3		
6KAF61430	**$1920.00**	Thyristor Module	32/34	220A															3	3
RFI Filters																				
6KAF63378	**$680.00**	RFI Filter (class A2)	21	-							1	1	1							
6KAF63381	**$685.00**	RFI Filter (class A2)	22	-										1	1					
6KAF63427	**$40.00**	RFI Filter (class A2)	31	-												1	1	1		
6KAF63377	**$1235.00**	RFI Filter (class A1/B)	21	-							1	1	1							
6KAF63380	**$1495.00**	RFI Filter (class A1/B)	22	-										1	1					
6KAF63425	**$4265.00**	RFI Filter (class A1/B)	31	-												1	1	1		
6KAF63422	**$4750.00**	RFI Filter (class A1/B)	32	-															1	1
6KAF61412	**$1325.00**	RFI Filter (class A1/B)	23	-							1	1	1							
6KAF61416	**$1535.00**	RFI Filter (class A1/B)	24	-										1	1	1				
6KAF61419	**$2575.00**	RFI Filter (class A1/B)	33	-													1	1		
6KAF61420	**$3185.00**	RFI Filter (class A1/B)	34	-															1	1
Current Transducers																				
6KAF61898	**$1625.00**	Current Transducer Card	31/33	-												1	1	1		
6KAF61899	**$1640.00**	Current Transducer Card	32/34	-															1	1
DC Link																				
6KAF61424	**$860.00**	DC Capacitors	31/33	4500uF													2	2		
6KAF61425	**$1360.00**	DC Capacitors	32/34	2700uF															2	2
6KAF61060	**$1200.00**	DC Link Reactors	21	780mH								1								
6KAF61061	**$1260.00**	DC Link Reactors	21	580mH									1							
6KAF61062	**$1260.00**	DC Link Reactors	22	490mH										1						
6KAF61063	**$1385.00**	DC Link Reactors	22	410mH											1					
6KAF61035	**$2210.00**	DC Link Reactors	31	300mH												1				
6KAF61036	**$2630.00**	DC Link Reactors	31	260mH													1			
6KAF61037	**$2600.00**	DC Link Reactors	31	200mH														1		
6KAF61038	**$3535.00**	DC Link Reactors	32	170mH															1	
6KAF61039	**$4100.00**	DC Link Reactors	32	100mH																1
6KAF61959	**$2325.00**	DC Link Assembly	24	-										1	1	1				

AF-600FP™ Fan and Pump Drive Replacement Parts

IP 20 - 575 Vac, 3-Phase, 50/60Hz Input (continued)
IP 55/66 - 575 Vac, 3-Phase, 50/60Hz Input (continued)

Product Number	List Price GO-5RP	Description	Unit Size	Rating	Drive Hp and Quantity Per Drive															
					1	2	3	5	7.5	10	15	20	25	30	40	50	60	75	100	125
Fans																				
6KAF61010	**$160.00**	Fan Assembly	13	-	1	1	1	1	1	1										
6KAF61017	**$295.00**	Fan Assembly	15	-	1	1	1	1	1	1										
6KAF63563	**$270.00**	External Fan (IP20)	23	12W							1	1	1							
6KAF63699	**$250.00**	External Fan (IP20)	24	12W										1	1	1				
6KAF64292	**$250.00**	External Fan (IP20)	33	12W													2	2		
6KAF64294	**$355.00**	External Fan (IP20)	34	18W															2	2
6KAF63407	**$455.00**	External Fan (IP55)	21	22W							1	1	1							
6KAF63406	**$640.00**	External Fan (IP55)	22	22W										1	1					
6KAF63865	**$645.00**	External Fan (IP55)	31	26W												1	1	1		
6KAF63867	**$1235.00**	External Fan (IP55)	32	22W															1	1
6KAF63440	**$105.00**	Internal Fan	21/23	5.8W							1	1	1							
6KAF63441	**$105.00**	Internal Fan	22/24	5.8W										1	1	1				
6KAF63923	**$110.00**	Internal Fan	31/32/33/34	5.8W												1	1	1	1	1
Accessory Bags																				
6KAF61022	**$275.00**	Connectors Accessory Bag	12/13	-	1	1	1	1	1	1										
6KAF61023	**$240.00**	Connectors Accessory Bag	15	-	1	1	1	1	1	1										
6KAF62060	**$120.00**	Connectors Accessory Bag	21	-							1	1	1							
6KAF62061	**$125.00**	Connectors Accessory Bag	22	-										1	1					
6KAF60980	**$140.00**	Connectors Accessory Bag	23	-							1	1	1							
6KAF61300	**$270.00**	Connectors Accessory Bag	24	-										1	1	1				
6KAF60046	**$200.00**	Connectors Accessory Bag	31	-												1	1	1		
6KAF60047	**$210.00**	Connectors Accessory Bag	32	-															1	1
6KAF60981	**$225.00**	Connectors Accessory Bag	33	-													1	1		
6KAF60982	**$270.00**	Connectors Accessory Bag	34	-															1	
6KAF60983	**$270.00**	Connectors Accessory Bag	34	-																1
6KAF60633	**$55.00**	Brake and Load Sharing Connectors Bag	12/13/15	-	1	1	1	1	1	1										

High Power
IP 00 - 460 Vac, 3-Phase, 50/60Hz Input
IP 21/54 - 460 Vac, 3-Phase, 50/60Hz Input

Product Number	List Price GO-5RP	Description	Unit Size	Rating	Drive Hp and Quantity Per Drive														
					150	200	250	300	350	450	500	550	600	650	750	900	1000	1200	1350
Main Control Card																			
6KAF61109	**$950.00**	Control Card	-	-	1	1	1	1	1	1	1	1	1	1	1	1	1	1	1
Keypad																			
KYPDACGP1	**$500.00**	Replacement Graphical Keypad	-	-	1	1	1	1	1	1	1	1	1	1	1	1	1	1	1
6KAF63414	**$40.00**	Frame	-	-	1	1	1	1	1	1	1	1	1	1	1	1	1	1	1
Power Card																			
6KAF6H8652	**$2100.00**	PCA3 - Power card	-		1														
6KAF6H8653	**$2100.00**	PCA3 - Power Card	-			1													
6KAF6H8654	**$2100.00**	PCA3 - Power Card	-				1												
6KAF6H8655	**$2100.00**	PCA3 - Power Card	-					1											
6KAF6H8656	**$2100.00**	PCA3 - Power Card	-						1										
6KAF6H8657	**$2100.00**	PCA3 - Power Card	-							1									
6KAF6H8658	**$2100.00**	PCA3 - Power Card	-								1								
6KAF6H8659	**$2100.00**	PCA3 - Power Card	-									1							
6KAF6H8660	**$2100.00**	PCA3 - Power Card	-										1						
6KAF6H8774	**$2625.00**	Power Card	-											3					
6KAF6H8775	**$2625.00**	Power Card	-												3				
6KAF6H8776	**$2625.00**	Power Card	-													3			
6KAF6H8777	**$2625.00**	Power Card	-														3		
6KAF6H8778	**$2625.00**	Power Card	-															4	
6KAF6H8779	**$2625.00**	Power Card	-																4
6KAF6H8308	**$95.00**	PCA4 - Current Scaling PCA, 4.54 Ohm	-		1														
6KAF6H8309	**$95.00**	PCA4 - Current Scaling PCA, 3.79 Ohm	-			1													
6KAF6H8310	**$100.00**	PCA4 - Current Scaling PCA, 3.10 Ohm	-				1												
6KAF6H8311	**$95.00**	PCA4 - Current Scaling PCA, 2.56 Ohm	-					1			1	1				2			3
6KAF6H8312	**$100.00**	PCA4 - Current Scaling PCA, 5.10 Ohm	-						1										
6KAF6H8554	**$100.00**	PCA4 - Current Scaling PCA, 4.21 Ohm	-							1				2	2			3	
6KAF6H8627	**$135.00**	PCA4 - Current Scaling PCA, 2.32 Ohm	-										1				2		
6KAF6H8773	**$1840.00**	MDCIC board, CC	-											1	1	1	1	1	1
6KAF6H8626	**$1640.00**	PCA5 - Gate Drive PCA, CC	-		1	1	1	1	1	1	1	1	1						
6KAF6H8307	**$215.00**	PCA8 - HF PCA	-		1	1	1	1	1	1	1	1	1						
6KAF6H8306	**$1535.00**	PCA11 - Softcharge PCA, CC	-		1	1	1	1	1										
6KAF6H8555	**$1540.00**	PCA11 - Softcharge PCA, CC	-							1	1	1	1						
6KAF6H8510	**$240.00**	PCA9 - Balance PCA	-		1	1	1	2	2	2	2	2	2						

AF-600FP™ Fan and Pump Drive
Replacement Parts

IP 00 - 460 Vac, 3-Phase, 50/60Hz Input (continued)
IP 21/54 - 460 Vac, 3-Phase, 50/60Hz Input (continued)

Product Number	List Price GO-5RP	Description	Unit Size	Rating	Drive Hp and Quantity Per Drive														
					150	200	250	300	350	450	500	550	600	650	750	900	1000	1200	1350
Inverter IGBTs																			
6KAF6H8628	**$5700.00**	IGBT 1, 2 - IGBT kit, 300A	-		1		2	2											
6KAF6H8629	**$7630.00**	IGBT 1, 2 - IGBT kit, 450A	-			1			2										
6KAF6H8630	**$5740.00**	IGBT 1, 2, 3 - IGBT kit, 300A	-							3									
6KAF6H8631	**$7790.00**	IGBT 1, 2, 3 - IGBT kit, 450A	-								3	3	3						
6KAF6H8323	**$105.00**	C 2,3,4,5,6,7,8,9,10 - CAP IGBT Snubber, 1000V, 1.5uF	-		3	3	6	6	6	9	9	9	9						
6KAF6H8743	**$107800.00**	Inverter Module	-											2					
6KAF6H8744	**$127300.00**	Inverter Module	-												2				
6KAF6H8745	**$144000.00**	Inverter Module	-													2			
6KAF6H8746	**$171250.00**	Inverter Module	-														2		
6KAF6H8747	**$127300.00**	Inverter Module	-															3	
6KAF6H8748	**$144000.00**	Inverter Module	-																3
Brake IGBT																			
6KAF6H8316	**$3370.00**	IGBT 4,5 - Brake IGBT kit	-		1	1	2	2	2	2	2	2	2						
Rectifiers																			
6KAF6H8317	**$1400.00**	SCR 1, 2, 3 - SCR/Diode kit, 160A	-		3	3													
6KAF6H8318	**$1435.00**	SCR 1, 2, 3 - SCR/Diode kit, 175A	-				3												
6KAF6H8319	**$2275.00**	SCR 1, 2, 3 - SCR/Diode kit, 250A	-					3											
6KAF6H8320	**$2460.00**	SCR 1, 2, 3 - SCR/Diode kit, 330A	-						3										
6KAF6H8558	**$2620.00**	SCR 1, 2, 3 - SCR kit, 500A	-							3	3	3	3						
6KAF6H8559	**$2340.00**	D 1, 2, 3 - Diode kit, 600A	-							3	3	3	3						
6KAF6H8712	**$101810.00**	Rectifier Module	-											1					
6KAF6H8713	**$101810.00**	Rectifier Module	-												1				
6KAF6H8714	**$137000.00**	Rectifier Module	-													1			
6KAF6H8715	**$137000.00**	Rectifier Module	-														1		
6KAF6H8716	**$185000.00**	Rectifier Module	-															1	
6KAF6H8717	**$185000.00**	Rectifier Module	-																1
Current Transducers																			
6KAF6H8342	**$525.00**	L 2,3,4 - Current Sensor, 300A	-		3	3	3	3											
6KAF6H8343	**$755.00**	L 2,3,4 - Current Sensor, 500A	-						3	3									
6KAF6H8563	**$1925.00**	L 2,3,4 - Current Sensor, 1000A	-								3	3	3						
DC Link																			
6KAF6H8324	**$4570.00**	CBANK 1, 2 - CAP Bank, 4 Cap	-		1			2	1										
6KAF6H8325	**$6115.00**	CBANK 1, 2 - CAP Bank, 6 Cap	-			1	1		1										
6KAF6H8636	**$8410.00**	CBANK 1, 2 - CAP Bank, 6 Cap	-							2	1								
6KAF6H8637	**$9570.00**	CBANK 1, 2 - CAP Bank, 8 Cap	-								1	2	2						
6KAF6H8337	**$3185.00**	L1 - Bus Inductor, 200uH	-		1														
6KAF6H8338	**$3380.00**	L1 - Bus Inductor, 157uH	-			1													
6KAF6H8339	**$3720.00**	L1 - Bus Inductor, 136uH	-				1												
6KAF6H8340	**$3950.00**	L1 - Bus Inductor, 109uH	-					1											
6KAF6H8341	**$4175.00**	L1 - Bus Inductor, 87uH	-						1										
6KAF6H8564	**$6600.00**	L1 - Bus Inductor, 62uH	-							1									
6KAF6H8565	**$7140.00**	L1 - Bus Inductor, 51uH	-								1	1	1						
6KAF6H8322	**$515.00**	R1 - Softcharge Resistor, 27 Ohm, 110W	-		1	1	1	1	1										
6KAF6H8560	**$575.00**	R1 - Softcharge Resistor, 27 Ohm, 155W	-							1	1	1	1						
Fuses																			
6KAF6H8334	**$300.00**	FU 1,2,3 - Fuse,Main, 350A	-		3	3													
6KAF6H8335	**$345.00**	FU 1,2,3 - Fuse,Main, 630A	-				3	3	3										
6KAF6H8591	**$560.00**	FU 1,2,3 - Fuse,Main, 700A	-							3									
6KAF6H8592	**$840.00**	FU 1,2,3 - Fuse Main, 900A	-								3	3	3						
6KAF6H8769	**$3460.00**	Fuse Mains, 2000A	-											3	3	3	3		
6KAF6H8770	**$3860.00**	Fuse Mains, 2500A	-															3	3
6KAF6H8767	**$1555.00**	Fuse DC, 1100A	-											4	4			6	
6KAF6H8768	**$1370.00**	Fuse DC, 1400 A	-													4	4		6
6KAF6H8336	**$130.00**	Fuse Softcharge, 20A, PKG3	-		1	1	1	1	1	1	1	1	1						
6KAF6H8440	**$80.00**	FU 5 - Fuse, 4A, PKG3, Power PCA, Fan	-		1	1	1	1	1	1	1	1	1						
6KAF6H8440	**$80.00**	FU 4 - Fuse, 4A, PKG3 Power PCA,Fan	-		1	1	1	1	1	1									
6KAF6H8609	**$225.00**	FU 4 - Fuse, 15A, PKG3, Fan	-								1	1	1						
Fans																			
6KAF6H8329	**$2185.00**	F1+C1 - Heatsink Fan Assy	-		1	1	1	1	1										
6KAF6H8578	**$4270.00**	F1+C1 - Heatsink Fan Assy	-							1									
6KAF6H8579	**$9975.00**	F1+C1 - Heatsink Fan Assy	-								1	1	1						
6KAF6H8771	**$2990.00**	Fan Heatsink	-											3	3	3	3	4	4
6KAF6H8330	**$1580.00**	F 2, 3 - Door Fan Kit	41/42/51		1	1	1	1	1	1	1	1	1						
6KAF6H8331	**$170.00**	Door Vent Kit	41/42/51		1	1	1	1	1	1	1	1	1						
6KAF6H8332	**$155.00**	Door Fan Filter, PKG10 (IP54/Nema 12 Drive)	41/42/51		1	1	1	1	1	1	1	1	1						
6KAF6H8639	**$225.00**	F4 - DC Top Fan, IP00/Chassis Unit Drive	43/44		1	1	1	1	1										
6KAF6H8333	**$1150.00**	F 2, 3 - Door/Top AC Fan	41/42/51		1	1	1	1	1	1	1	1	1						
6KAF6H8772	**$4250.00**	Door Fan	-											3	3	3	3	3	3

IP 00 - 460 Vac, 3-Phase, 50/60Hz Input (continued)
IP 21/54 - 460 Vac, 3-Phase, 50/60Hz Input (continued)

Product Number	List Price GO-5RP	Description	Unit Size	Rating	Drive Hp and Quantity Per Drive														
					150	200	250	300	350	450	500	550	600	650	750	900	1000	1200	1350
Fans (continued)																			
6KAF6H8612	**$770.00**	F5 - Fuse Fan, Input Plate	-							1	1	1	1						
6KAF6H8344	**$500.00**	TR1 - Fan Transformer Assy, 500V	-		1	1	1	1	1										
6KAF6H8566	**$580.00**	TR1 - Fan Transformer Assy	-							1									
6KAF6H8567	**$1990.00**	TR1 - Fan Transformer Assy, 1500VA	-								1	1	1						
6KAF6H8577	**$1410.00**	L5 - Heatsink Fan Inductor	-								1	1	1						

IP 00 - 575 Vac, 3-Phase, 50/60Hz Input
IP 21/54 - 575 Vac, 3-Phase, 50/60Hz Input

Product Number	List Price GO-5RP	Description	Unit Size	Rating	Drive Hp and Quantity Per Drive														
					150	200	250	300	350	400	450	500	600	650	750	950	1050	1150	1350
Main Control Card																			
6KAF61109	**$950.00**	Control Card	-	-	1	1	1	1	1	1	1	1	1	1	1	1	1	1	1
Keypad																			
6KAF61107	**$500.00**	Replacement Graphical Keypad	-	-	1	1	1	1	1	1	1	1	1	1	1	1	1	1	1
6KAF61007	**$40.00**	Frame	-	-	1	1	1	1	1	1	1	1	1	1	1	1	1	1	1
Power Card																			
6KAF6H8661	**$2100.00**	Power Card	-		1														
6KAF6H8662	**$2100.00**	Power Card	-			1													
6KAF6H8663	**$2100.00**	Power Card	-				1												
6KAF6H8664	**$2100.00**	Power Card	-					1											
6KAF6H8665	**$2100.00**	Power Card	-						1										
6KAF6H8666	**$2100.00**	Power Card	-							1									
6KAF6H8667	**$2100.00**	Power Card	-								1								
6KAF6H8668	**$2100.00**	Power Card	-									1							
6KAF6H8669	**$2100.00**	Power Card	-										1						
6KAF6H8670	**$2100.00**	Power Card	-											1					
6KAF6H8786	**$2625.00**	Power Card	-												3				
6KAF6H8787	**$2625.00**	Power Card	-													3			
6KAF6H8788	**$2625.00**	Power Card	-														3		
6KAF6H8789	**$2625.00**	Power Card	-															4	
6KAF6H8791	**$2625.00**	Power Card	-																4
6KAF6H8308	**$95.00**	PCA4 - Current Scaling PCA, 4.54 Ohm	-			1					1	1			2			3	
6KAF6H8309	**$95.00**	PCA4 - Current Scaling PCA, 3.79 Ohm	-										1			2			3
6KAF6H8310	**$95.00**	PCA4 - Current Scaling PCA, 3.10 Ohm	-				1	1											
6KAF6H8311	**$95.00**	PCA4 - Current Scaling PCA, 2.56 Ohm	-						1					1			2		
6KAF6H8312	**$95.00**	PCA4 - Current Scaling PCA, 5.10 Ohm	-							1									
6KAF6H8525	**$95.00**	PCA4 - Current Scaling PCA, 5.85 Ohm	-		1														
6KAF6H8773	**$1840.00**	MDCIC Board, CC	-												1	1	1	1	1
6KAF6H8626	**$1640.00**	PCA5 - Gate Drive PCA, CC	-		1	1	1	1	1	1	1	1	1	1					
6KAF6H8523	**$215.00**	PCA8 - HF PCA	-		1	1	1	1	1	1	1	1	1	1					
6KAF6H8522	**$1535.00**	PCA11 - Softcharge PCA, CC	-		1	1	1	1	1	1									
6KAF6H8466	**$1535.00**	PCA11 - Softcharge PCA, CC	-								1	1	1	1					
6KAF6H8526	**$25.00**	PCA9 - Balance, PCA	-		1	1	2	2	2	2	2	2	2	2					
Inverter IGBTs																			
6KAF6H8632	**$8300.00**	IGBT1, 2 - IGBT kit, 300A	-		1		2	2											
6KAF6H8633	**$10815.00**	IGBT1, 2 - IGBT kit, 450A	-			1			2	2									
6KAF6H8634	**$8440.00**	IGBT1, 2, 3 - IGBT kit, 300A	-								3	3							
6KAF6H8635	**$10975.00**	IGBT1, 2, 3 - IGBT kit, 450A	-										3	3					
6KAF6H8534	**$160.00**	C2,3,4,5,6,7,8,9,10 - CAP IGBT Snubber, 1250V, 1uF	-		3	3	6	6	6	6	9	9	9	9					
6KAF6H8755	**$196925.00**	Inverter Module	-												2				
6KAF6H8756	**$291985.00**	Inverter Module	-													2			
6KAF6H8757	**$322260.00**	Inverter Module	-														2		
6KAF6H8758	**$196925.00**	Inverter Module	-															3	
6KAF6H8759	**$291985.00**	Inverter Module	-																3
Brake IGBT																			
6KAF6H8316	**$3370.00**	IGBT4, 5 - Brake IGBT kit	-		1	1	2	2	2	2	2	2	2	2					
Rectifiers																			
6KAF6H8529	**$1415.00**	SCR1, 2, 3 - SCR/Diode kit, 160A	-		3	3	3												
6KAF6H8530	**$2830.00**	SCR1, 2, 3 - SCR/Diode kit, 280A	-					3	3	3									
6KAF6H8434	**$3360.00**	SCR1, 2, 3 -SCR kit, 430A	-								3	3	3	3					
6KAF6H8435	**$4290.00**	D1, 2, 3 - Diode kit, 540A	-								3	3	3	3					
6KAF6H8724	**$265810.00**	Rectifier Module	-												1				
6KAF6H8725	**$265810.00**	Rectifier Module	-													1			
6KAF6H8726	**$265810.00**	Rectifier Module	-														1		
6KAF6H8727	**$357675.00**	Rectifier Module	-															1	
6KAF6H8728	**$357675.00**	Rectifier Module	-																1

AF-600FP™ Fan and Pump Drive Replacement Parts

IP 00 - 575 Vac, 3-Phase, 50/60Hz Input (continued)
IP 21/54 - 575 Vac, 3-Phase, 50/60Hz Input (continued)

Product Number	List Price GO-5RP	Description	Unit Size	Rating	Drive Hp and Quantity Per Drive 150	200	250	300	350	400	450	500	600	650	750	950	1050	1150	1350
Current Transducers																			
6KAF6H8342	**$525.00**	L2, 3, 4 - Current Sensor, 300A	-		3	3	3	3	3										
6KAF6H8343	**$750.00**	L2, 3, 4 - Current Sensor, 500A	-							3	3	3	3						
6KAF6H8563	**$1925.00**	L2, 3, 4 - Current Sensor, 1000A	-											3					
DC Link																			
6KAF6H8532	**$5420.00**	CBANK1, 2 - CAP Bank, 4 Cap	-		1		2	2	1										
6KAF6H8533	**$7360.00**	CBANK1, 2 - CAP Bank, 6 Cap	-			1			1	2									
6KAF6H8638	**$12310.00**	CBANK1, 2 - CAP Bank, 8 Cap	-								2	2	2	2					
6KAF6H8536	**$3435.00**	L1 - Bus Inductor, 350uH	-		1														
6KAF6H8537	**$3550.00**	L1 - Bus Inductor, 250uH	-			1													
6KAF6H8538	**$3975.00**	L1 - Bus Inductor, 195uH	-				1	1											
6KAF6H8339	**$3720.00**	L1 - Bus Inductor, 136uH	-						1										
6KAF6H8340	**$3950.00**	L1 - Bus Inductor, 109uH	-							1									
6KAF6H8469	**$8730.00**	L1 - Bus Inductor, 73uH	-								1	1	1	1					
6KAF6H8531	**$565.00**	R1 - Softcharge Resistor, 68 Ohm, 110W	-		1	1	1	1	1	1									
6KAF6H8467	**$550.00**	R1 - Softcharge Resistor, 68 Ohm, 155W	-								1	1	1	1					
Fuses																			
6KAF6H8334	**$300.00**	FU1, 2, 3 - Fuse Main, 350A	-		3	3													
6KAF6H8591	**$560.00**	FU1, 2, 3 - Fuse Main, 700A	-								3	3	3						
6KAF6H8592	**$850.00**	FU1, 2, 3 - Fuse Main, 900A	-											3					
6KAF6H8540	**$570.00**	FU1, 2, 3 - Fuse Main, 550A	-				3	3	3	3									
6KAF6H8769	**$3560.00**	Fuse Mains, 2000A	-												3	3	3	3	3
6KAF6H8767	**$1555.00**	Fuse DC, 1100A	-												4	4	4	6	6
6KAF6H8336	**$130.00**	Fuse Softcharge, 20A, PKG3	-		1	1	1	1	1	1	1	1	1	1					
6KAF6H8440	**$80.00**	FU5 - Fuse 4A PKG3 Power PCA Fan	-		1	1	1	1	1	1	1	1	1	1					
6KAF6H8440	**$80.00**	FU4 - Fuse 4A PKG3 Power PCA Fan	-		1	1	1	1	1	1	1	1							
6KAF6H8609	**$225.00**	FU4 - Fuse 15A PKG3 Fan	-										1	1					
Fans																			
6KAF6H8329	**$2185.00**	F1+C1 - Heatsink Fan Assy	-		1	1	1	1	1	1									
6KAF6H8578	**$4275.00**	F1+C1 - Heatsink Fan Assy	-								1	1							
6KAF6H8579	**$9975.00**	F1+C1 - Heatsink Fan Assy	-										1	1					
6KAF6H8771	**$2990.00**	Fan Heatsink	-												3	3	3	4	4
6KAF6H8330	**$1580.00**	F2,3 - Door Fan Kit	41/42/51		1	1	1	1	1	1	1	1	1	1					
6KAF6H8331	**$170.00**	Door Vent Kit	41/42/51		1	1	1	1	1	1	1	1	1	1					
6KAF6H8332	**$150.00**	Door Fan Filter, PKG10 (IP54/Nema 12 Drive)	41/42/51		1	1	1	1	1	1	1	1	1	1					
6KAF6H8639	**$225.00**	F4 - DC Top Fan, IP00/Open Chassis Drive	43/44		1	1	1	1	1	1									
6KAF6H8333	**$1150.00**	F2 - Door/Top AC Fan	52								1	1	1	1					
6KAF6H8333	**$1150.00**	F2, 3 - Door/Top AC Fan	41/42/51		1	1	1	1	1	1	1	1	1	1					
6KAF6H8772	**$4250.00**	Fan Door	-												3	3	3	3	3
6KAF6H8535	**$800.00**	TR1 - Fan Transformer Assy, 690V, 400VA	-		1	1	1	1	1	1	1	1							
6KAF6H8471	**$570.00**	TR1 - Fan Transformer Assy	-										1	1					
6KAF6H8577	**$1410.00**	L5 - Heatsink Fan Inductor	-										1	1					

High Power Cables
IP 00 - 460 Vac, 3-Phase, 50/60Hz Input
IP 21/54 - 460 Vac, 3-Phase, 50/60Hz Input

Product Number	List Price GO-5RP	Description	Unit Size	Drive Hp and Quantity Per Drive 150	200	250	300	350	450	500	550	600
Cables												
6KAF6H8640	**$70.00**	CBL1 - Kyepad Cable for IP54/Nema 12 Drive Type	41/42	1	1	1	1	1				
6KAF6H8586	**$75.00**	CBL1 - Keypad Cable	5X						1	1	1	1
6KAF6H8641	**$80.00**	CBL2 - Control Cable PCA, 44pin	4X & 5X	1	1	1	1	1	1	1	1	1
6KAF6H8541	**$185.00**	CBL5 - Current Sensor Cable	4X	1	1							
6KAF6H8349	**$365.00**	CBL5 - Currnet Sensor Cable	42			1	1	1				
6KAF6H8568	**$235.00**	CBL5 - Current Sensor Cable	5X						1			
6KAF6H8569	**$245.00**	CBL5 - Current Sensor Cable	5X							1	1	1
6KAF6H8542	**$75.00**	CBL8 - HS Fan Cable	41	1	1							
6KAF6H8359	**$100.00**	CBL8 - HS Fan Cable	42			1	1	1				
6KAF6H8571	**$80.00**	CBL8 - Fan Cable for IP00/Open Chassis Drive Type	51						1			
6KAF6H8572	**$120.00**	CBL8 - Fan Cable for IP54/Nema 12 Drive Type	52						1			
6KAF6H8573	**$85.00**	CBL8 - Fan Cable for IP00/Open Chassis Drive Type	51							1	1	1
6KAF6H8574	**$125.00**	CBL8 - Fan Cable for IP54/Nema 12 Drive Type	52							1	1	1
6KAF6H8354	**$60.00**	CBL9 - Softcharge Cable RST prime	4X	1	1	1	1	1				
6KAF6H8570	**$55.00**	CBL9 - Softcharge Cable RST prime	5X						1	1	1	1
6KAF6H8358	**$55.00**	CBL12 - Door Fan Cable	41/42	1	1	1	1	1				
6KAF6H8544	**$110.00**	CBL13 - SCR Cable	41	1	1							
6KAF6H8357	**$110.00**	CBL13 - SCR Cable	42			1	1	1				
6KAF6H8575	**$205.00**	CBL13 - SCR Cable	5X						1	1	1	1

IP 00 - 460 Vac, 3-Phase, 50/60Hz Input (continued)
IP 21/54 - 460 Vac, 3-Phase, 50/60Hz Input (continued)

Product Number	List Price GO-5RP	Description	Unit Size	Drive Hp and Quantity Per Drive 150	200	250	300	350	450	500	550	600
Cables (continued)												
6KAF6H8356	**$45.00**	CBL14 - DC to Power PCA Cable	4X	1	1	1	1	1				
6KAF6H8576	**$50.00**	CBL14 - DC to Power PCA Cable	5X						1	1	1	1
6KAF6H8830	**$20.00**	CBL15 - RFI Switch Cable	4X	1	1	1	1	1				
6KAF6H8580	**$65.00**	CBL15 - RFI Switch Cable	5X						1	1	1	1
6KAF6H8363	**$30.00**	CBL16 - Gate Driver Cable, 16pin	41	1	1							
6KAF6H8350	**$41.00**	CBL16 - Gate Driver Cable, 16pin	42			1	1	1				
6KAF6H8581	**$45.00**	CBL16 - Gate Driver Cable, 16pin	5X						1	1	1	1
6KAF6H8364	**$60.00**	CBL17,18,19 IGBT Gate Cable	41	3	3							
6KAF6H8351	**$95.00**	CBL17,18,19 - IGBT Gate Cable	42			3	3	3				
6KAF6H8582	**$40.00**	CBL17,18,19 - IGBT Gate Cable	51						3	3	3	3
6KAF6H8352	**$65.00**	CBL20 - IGBT Temperature Cable	-	1	1	1	1	1	1	1	1	1
6KAF6H8365	**$40.00**	CBL21 - Brake IGBT Cable	41	1	1							
6KAF6H8368	**$65.00**	CBL21 - Brake IGBT Cable	42			1	1	1				
6KAF6H8583	**$85.00**	CBL21 - Brake IGBT Cable	5X						1	1	1	1
6KAF6H8366	**$320.00**	CBL22 - Brake Power Plus Cable	41	1	1							
6KAF6H8369	**$595.00**	CBL22 - Brake Power Plus Cable	42			1	1	1				
6KAF6H8367	**$320.00**	CBL23 - Brake Power Minus Cable	41	1	1							
6KAF6H8370	**$550.00**	CBL23 - Brake Power Minus Cable	42			1	1	1				
6KAF6H8543	**$55.00**	CBL24 - Softcharge RST Cable	41	1	1							
6KAF6H8353	**$75.00**	CBL24 - Softcharge RST Cable	42			1	1	1				
6KAF6H8584	**$45.00**	CBL24 - Softcharge RST Cable	5X						1	1	1	1
6KAF6H8355	**$45.00**	CBL25 - Softcharge to DC Bus Cable	4X	1	1	1	1	1				
6KAF6H8585	**$40.00**	CBL25 - Softcharge to DC Bus Cable	5X						1	1	1	1
6KAF6H8613	**$65.00**	CBL26 - Fuse Fan Cable	5X						1	1	1	1
Terminals, Labels, Insulators												
6KAF6H8374	**$215.00**	TB1 - Bus Bars, Terminals Line/Load	4X	3	3							
6KAF6H8375	**$260.00**	TB1 - Bus Bars, Terminals Line/Load	4X			3	3	3				
6KAF6H8587	**$690.00**	TB1 - Bus Bars, Terminal Block	5X						3	3	3	3
6KAF6H8374	**$215.00**	TB2 - Bus Bars, Terminals Line/Load	4X	3	3							
6KAF6H8375	**$255.00**	TB2 - Bus Bars, Terminals Line/Load	4X			3	3	3				
6KAF6H8587	**$690.00**	TB2 - Bus Bars, Terminal Block	5X						3	3	3	3
6KAF6H8395	**$260.00**	TB3 - Bus Bars, Terminal, Load Share & Brake	4X	2	2	2	2	2				
6KAF6H8399	**$410.00**	TB3 - Bus Bars, Terminal, Load Share, Left	4X						1	1	1	1
6KAF6H8404	**$415.00**	TB3 - Bus Bars, Terminal, Load Share. Right	4X						1	1	1	1
6KAF6H8395	**$260.00**	TB4 - Bus Bars, Terminal, Load Share & Brake	4X	2	2							
6KAF6H8399	**$410.00**	TB4 - Bus Bars, Terminal, Load Share, Left	4X			1	1	1				
6KAF6H8404	**$415.00**	TB4 - Bus Bars, Terminal, Load Share. Right	4X			1	1	1				
6KAF6H8587	**$690.00**	TB4 - Bus Bars, Terminal Block	5X						2	2	2	2
6KAF6H8371	**$135.00**	TB1 - Terminal Insulator Line/Load	4X	1	1	1	1	1				
6KAF6H8588	**$155.00**	TB1 - Insulator Terminal Block	5X						3	3	3	3
6KAF6H8371	**$135.00**	TB2 - Terminal Insulator Line/Load	4X	1	1	1	1	1				
6KAF6H8588	**$155.00**	TB2 - Insulator Terminal Block	5X						3	3	3	3
6KAF6H8372	**$80.00**	TB3 - Terminal Insulator, Brake & Load Share	4X	1	1	1	1	1	1	1	1	1
6KAF6H8372	**$80.00**	TB4 - Terminal Insulator, Brake & Load Share	4X	1	1	1	1	1				
6KAF6H8588	**$155.00**	TB4 - Insulator Terminal Block	5X						2	2	2	2
6KAF6H8373	**$515.00**	Terminal Block Label Set	4X	1	1	1	1	1				
6KAF6H8589	**$1460.00**	Terminal Block Label Set	5X						1	1	1	1
6KAF6H8545	**$60.00**	Insulator Mylar for IGBT Bus	41	1	1							
6KAF6H8421	**$65.00**	Insulator Mylar for IGBT Bus	42			1	1	1				
6KAF6H8590	**$150.00**	Insulator for IGBT- Chassis	5X						1	1	1	1
6KAF6H8547	**$30.00**	Insulator for IGBT Snubber Capacitor Support	-	1	1	2	2	2				
6KAF6H8410	**$285.00**	Bus Bar Stand Off, PKG10	-	12	12	17	17	17	11	11	11	11
6KAF6H8610	**$230.00**	IGBT Output Standoff, PKG9	5X						9	9	9	9
Bus Bars												
6KAF6H8380	**$145.00**	Bus Bars, SCR, R S T	4X	3	3							
6KAF6H8548	**$95.00**	Bracket, SCR Bus Bars Support	4X	1	1							
6KAF6H8394	**$210.00**	Bus Bars, SCR Input	4X			3						
6KAF6H8387	**$180.00**	Bus Bars, SCR Plus, 1	4X				3	3				
6KAF6H8595	**$1270.00**	Bus Bars, SCR/Di Input	5X						3	3	3	3
6KAF6H8379	**$620.00**	Bus Bars Assy, SCR	4X	1	1							
6KAF6H8381	**$150.00**	Bus Bars, SCR Minus	4X	2	2							
6KAF6H8393	**$325.00**	Bus Bars, SCR DC	-			2						
6KAF6H8385	**$290.00**	Bus Bars, SCR Minus, 1	4X				2	2				
6KAF6H8386	**$380.00**	Bus Bars, SCR Minus, 2	4X			1	1	1				
6KAF6H8388	**$380.00**	Bus Bars, SCR Plus, 2	4X			1	1	1				
6KAF6H8596	**$1535.00**	Bus Bars, SCR/Di Output	5X						2	2	2	2
6KAF6H8597	**$2500.00**	Bus Bars, DC Bus Plus, Before DC Reactor	5X						1	1	1	1
6KAF6H8598	**$2500.00**	Bus Bars, DC Bus Minus,Before DC Reactor	5X						1	1	1	1
6KAF6H8549	**$150.00**	Bus Bars, DC Link, Plus	4X	1	1							
6KAF6H8391	**$190.00**	Bus Bars, DC Link, Plus	4X	1	1							
6KAF6H8382	**$265.00**	Bus Bars, DC Link Minus	4X			2	2	2				
6KAF6H8599	**$715.00**	Bus Bars, DC Bus, After DC Reactor	5X						2	2	2	2
6KAF6H8376	**$670.00**	Bus Bars Assy, IGBT	4X	1	1							

AF-600FP™ Fan and Pump Drive
Replacement Parts

IP 00 - 460 Vac, 3-Phase, 50/60Hz Input (continued)
IP 21/54 - 460 Vac, 3-Phase, 50/60Hz Input (continued)

Product Number	List Price GO-5RP	Description	Unit Size	Drive Hp and Quantity Per Drive 150	200	250	300	350	450	500	550	600
Bus Bars (continued)												
6KAF6H8377	**$675.00**	Bus Bars Assy, IGBT-Inductor	4X			1	1	1				
6KAF6H8378	**$690.00**	Bus Bars Assy, IGBT-Capacitor	4X			1	1	1				
6KAF6H8600	**$3675.00**	Bus Bars Assy, IGBT-Inductor	5X						1	1	1	1
6KAF6H8601	**$865.00**	Bus Bars Assy, IGBT-Capacitor	5X						3	3	3	3
6KAF6H8390	**$100.00**	Bus Bars, IGBT, U V W	4X	3	3							
6KAF6H8392	**$230.00**	Bus Bars, Motor, 2	4X	3	3							
6KAF6H8383	**$260.00**	Bus Bars, Motor, U W	4X			2	2	2				
6KAF6H8384	**$215.00**	Bus Bars, Motor V	4X			1	1	1				
6KAF6H8389	**$220.00**	Bus Bars, I-Sensor	4X			3	3	3				
6KAF6H8602	**$1175.00**	Bus Bars, IGBT Output	5X						3	3	3	3
6KAF6H8603	**$1180.00**	Bus Bars, Over Fan Box	5X						3	3	3	3
6KAF6H8604	**$530.00**	Bus Bars, Current Sensor 5352	5X						3			
6KAF6H8605	**$550.00**	Bus Bars, Current Sensor 5452-5502	4X							3	3	3
6KAF6H8397	**$190.00**	Bus Bars, Brake Plus	4X	1	1							
6KAF6H8398	**$210.00**	Bus Bars, Brake Minus	4X	1	1							
6KAF6H8396	**$320.00**	Bus Bars, Brake	4X			1	1	1				
6KAF6H8606	**$8620.00**	Bus Bars, Brake Assy	5X						1	1	1	1
6KAF6H8401	**$475.00**	Bus Bars, Load Share Plus	4X	1	1							
6KAF6H8400	**$460.00**	Bus Bars, Load Share Minus	4X	1	1							
6KAF6H8403	**$855.00**	Bus Bars, Load Share Plus	4X			1	1	1				
6KAF6H8402	**$655.00**	Bus Bars, Load Share Minus	4X			1	1	1				
6KAF6H8607	**$2055.00**	Bus Bars, Load Share Plus	5X						1	1	1	1
6KAF6H8608	**$2070.00**	Bus Bars, Load Share Minus	5X						1	1	1	1
6KAF6H8405	**$1370.00**	Bus Bars, SCR Input 2	4X	3	3							
6KAF6H8406	**$835.00**	Bus Bars, SCR, T, 1	4X			3	3	3				

IP 00 - 575 Vac, 3-Phase, 50/60Hz Input
IP 21/54 - 575 Vac, 3-Phase, 50/60Hz Input

Product Number	List Price GO-5RP	Description	Unit Size	Drive Hp and Quantity Per Drive 150	200	250	300	350	400	450	500	600	650
Cables													
6KAF6H8640	**$70.00**	CBL1 - Keypad Cable for IP54/Nema 12 Drive Type	41/42	1	1	1	1	1	1				
6KAF6H8586	**$75.00**	CBL1 - Keypad Cable	5X							1	1	1	1
6KAF6H8641	**$80.00**	CBL2 - Control Cable PCA, 44pin	4X & 5X	1	1	1	1	1	1	1	1	1	1
6KAF6H8541	**$185.00**	CBL5 - Current Sensor Cable	4X	1	1								
6KAF6H8349	**$365.00**	CBL5 - Currnet Sensor Cable	42			1	1	1	1				
6KAF6H8568	**$235.00**	CBL5 - Current Sensor Cable	5X							1	1	1	
6KAF6H8569	**$245.00**	CBL5 - Current Sensor Cable	5X										1
6KAF6H8542	**$75.00**	CBL8 - HS Fan Cable	41	1	1								
6KAF6H8359	**$100.00**	CBL8 - HS Fan Cable	42			1	1	1	1				
6KAF6H8571	**$80.00**	CBL8 - Fan Cable for IP00/Open Chassis Drive Type	51							1	1		
6KAF6H8572	**$120.00**	CBL8 - Fan Cable for IP54/Nema 12 Drive Type	52							1	1		
6KAF6H8573	**$85.00**	CBL8 - Fan Cable for IP00/Open Chassis Drive Type	51									1	1
6KAF6H8574	**$125.00**	CBL8 - Fan Cable for IP54/Nema 12 Drive Type	52									1	1
6KAF6H8354	**$60.00**	CBL9 - Softcharge Cable RST prime	4X	1	1	1	1	1	1				
6KAF6H8570	**$55.00**	CBL9 - Softcharge Cable RST prime	5X							1	1	1	1
6KAF6H8358	**$55.00**	CBL12 - Door Fan Cable	41/42	1	1	1	1	1	1				
6KAF6H8544	**$110.00**	CBL13 - SCR Cable	41	1	1								
6KAF6H8357	**$110.00**	CBL13 - SCR Cable	42			1	1	1	1				
6KAF6H8575	**$205.00**	CBL13 - SCR Cable	5X							1	1	1	1
6KAF6H8356	**$45.00**	CBL14 - DC to Power PCA Cable	4X	1	1	1	1	1	1				
6KAF6H8576	**$50.00**	CBL14 - DC to Power PCA Cable	5X							1	1	1	1
6KAF6H8363	**$30.00**	CBL16 - Gate Driver Cable, 16pin	41	1	1								
6KAF6H8350	**$41.00**	CBL16 - Gate Driver Cable, 16pin	42			1	1	1	1				
6KAF6H8581	**$45.00**	CBL16 - Gate Driver Cable, 16pin	5X							1	1	1	1
6KAF6H8364	**$60.00**	CBL17,18,19 IGBT Gate Cable	41	3	3								
6KAF6H8351	**$95.00**	CBL17,18,19 - IGBT Gate Cable	42			3	3	3	3				
6KAF6H8582	**$40.00**	CBL17,18,19 - IGBT Gate Cable	51							3	3	3	3
6KAF6H8352	**$65.00**	CBL20 - IGBT Temperature Cable	-	1	1	1	1	1	1	1	1	1	1
6KAF6H8365	**$40.00**	CBL21 - Brake IGBT Cable	41	1	1								
6KAF6H8368	**$65.00**	CBL21 - Brake IGBT Cable	42			1	1	1	1				
6KAF6H8583	**$85.00**	CBL21 - Brake IGBT Cable	5X							1	1	1	1
6KAF6H8366	**$320.00**	CBL22 - Brake Power Plus Cable	41	1	1								
6KAF6H8369	**$595.00**	CBL22 - Brake Power Plus Cable	42			1	1	1	1				
6KAF6H8367	**$320.00**	CBL23 - Brake Power Minus Cable	41	1	1								
6KAF6H8370	**$550.00**	CBL23 - Brake Power Minus Cable	42			1	1	1	1				
6KAF6H8543	**$55.00**	CBL24 - Softcharge RST Cable	41	1	1								
6KAF6H8353	**$75.00**	CBL24 - Softcharge RST Cable	42			1	1	1	1				
6KAF6H8584	**$45.00**	CBL24 - Softcharge RST Cable	5X							1	1	1	1
6KAF6H8355	**$45.00**	CBL25 - Softcharge to DC Bus Cable	4X	1	1	1	1	1	1				
6KAF6H8585	**$40.00**	CBL25 - Softcharge to DC Bus Cable	5X							1	1	1	1
6KAF6H8613	**$65.00**	CBL26 - Fuse Fan Cable	5X							1	1	1	1

IP 00 - 575 Vac, 3-Phase, 50/60Hz Input (continued)
IP 21/54 - 575 Vac, 3-Phase, 50/60Hz Input (continued)

Product Number	List Price GO-5RP	Description	Unit Size	Drive Hp and Quantity Per Drive 150	200	250	300	350	400	450	500	600	650
Terminals, Labels, Insulators													
6KAF6H8374	**$215.00**	TB1 - Bus Bars, Terminals Line/Load	4X	3	3								
6KAF6H8375	**$260.00**	TB1 - Bus Bars, Terminals Line/Load	4X			3	3	3	3				
6KAF6H8587	**$690.00**	TB1 - Bus Bars, Terminal Block	5X							3	3	3	3
6KAF6H8374	**$215.00**	TB2 - Bus Bars, Terminals Line/Load	4X	3	3								
6KAF6H8375	**$255.00**	TB2 - Bus Bars, Terminals Line/Load	4X			3	3	3	3				
6KAF6H8587	**$690.00**	TB2 - Bus Bars, Terminal Block	5X							3	3	3	3
6KAF6H8395	**$260.00**	TB3 - Bus Bars, Terminal, Load Share & Brake	4X	2	2	2	2	2	2				
6KAF6H8399	**$410.00**	TB3 - Bus Bars, Terminal, Load Share, Left	4X							1	1	1	1
6KAF6H8404	**$415.00**	TB3 - Bus Bars, Terminal, Load Share. Right	4X							1	1	1	1
6KAF6H8395	**$260.00**	TB4 - Bus Bars, Terminal, Load Share & Brake	4X	2	2								
6KAF6H8399	**$410.00**	TB4 - Bus Bars, Terminal, Load Share, Left	4X			1	1	1	1				
6KAF6H8404	**$415.00**	TB4 - Bus Bars, Terminal, Load Share. Right	4X			1	1	1	1				
6KAF6H8587	**$690.00**	TB4 - Bus Bars, Terminal Block	5X							2	2	2	2
6KAF6H8371	**$135.00**	TB1 - Terminal Insulator Line/Load	4X	1	1	1	1	1	1				
6KAF6H8588	**$155.00**	TB1 - Insulator Terminal Block	5X							3	3	3	3
6KAF6H8371	**$135.00**	TB2 - Terminal Insulator Line/Load	4X	1	1	1	1	1	1				
6KAF6H8588	**$155.00**	TB2 - Insulator Terminal Block	5X							3	3	3	3
6KAF6H8372	**$80.00**	TB3 - Terminal Insulator, Brake & Load Share	4X	1	1	1	1	1	1	1	1	1	1
6KAF6H8372	**$80.00**	TB4 - Terminal Insulator, Brake & Load Share	4X	1	1	1	1	1	1				
6KAF6H8588	**$155.00**	TB4 - Insulator Terminal Block	5X							2	2	2	2
6KAF6H8373	**$515.00**	Terminal Block Label Set	4X	1	1	1	1	1	1				
6KAF6H8589	**$1460.00**	Terminal Block Label Set	5X							1	1	1	1
6KAF6H8545	**$60.00**	Insulator Mylar for IGBT Bus	41	1	1								
6KAF6H8421	**$65.00**	Insulator Mylar for IGBT Bus	42			1	1	1	1				
6KAF6H8590	**$150.00**	Insulator for IGBT- Chassis	5X							1	1	1	1
6KAF6H8547	**$30.00**	Insulator for IGBT Snubber Capacitor Support	-	1	1	2	2	2	2				
6KAF6H8546	**$160.00**	Line Fuse Insulator	-			1	1	1	1				
6KAF6H8410	**$285.00**	Bus Bar Stand Off, PKG10	-	12	12	17	17	17	17	11	11	11	11
6KAF6H8610	**$230.00**	IGBT Output Standoff, PKG9	5X							9	9	9	9
Bus Bars													
6KAF6H8380	**$145.00**	Bus Bars, SCR, R S T	4X	3	3								
6KAF6H8548	**$95.00**	Bracket, SCR Bus Bars Support	4X	1	1								
6KAF6H8394	**$210.00**	Bus Bars, SCR Input	4X			3							
6KAF6H8387	**$180.00**	Bus Bars, SCR Plus, 1	4X				3	3	3				
6KAF6H8700	**$1615.00**	Bus Bars, SCR/Di Input	5X							3	3	3	3
6KAF6H8379	**$620.00**	Bus Bars Assy, SCR	4X	1	1								
6KAF6H8381	**$150.00**	Bus Bars, SCR Minus	4X	2	2								
6KAF6H8393	**$325.00**	Bus Bars, SCR DC	-			2							
6KAF6H8385	**$290.00**	Bus Bars, SCR Minus, 1	4X				2	2	2				
6KAF6H8386	**$380.00**	Bus Bars, SCR Minus, 2	4X			1	1	1	1				
6KAF6H8388	**$380.00**	Bus Bars, SCR Plus, 2	4X			1	1	1	1				
6KAF6H8701	**$1780.00**	Bus Bars, SCR/Di Output	5X							2	2	2	2
6KAF6H8597	**$2500.00**	Bus Bars, DC Bus Plus, Before DC Reactor	5X							1	1	1	1
6KAF6H8598	**$2500.00**	Bus Bars, DC Bus Minus,Before DC Reactor	5X							1	1	1	1
6KAF6H8549	**$150.00**	Bus Bars, DC Link, Plus	4X	1	1								
6KAF6H8391	**$190.00**	Bus Bars, DC Link, Plus	4X	1	1								
6KAF6H8382	**$265.00**	Bus Bars, DC Link Minus	4X			2	2	2	2				
6KAF6H8599	**$715.00**	Bus Bars, DC Bus, After DC Reactor	5X							2	2	2	2
6KAF6H8376	**$670.00**	Bus Bars Assy, IGBT	4X	1	1								
6KAF6H8377	**$675.00**	Bus Bars Assy, IGBT-Inductor	4X			1	1	1	1				
6KAF6H8378	**$690.00**	Bus Bars Assy, IGBT-Capacitor	4X			1	1	1	1				
6KAF6H8600	**$3675.00**	Bus Bars Assy, IGBT-Inductor	5X							1	1	1	1
6KAF6H8601	**$865.00**	Bus Bars Assy, IGBT-Capacitor	5X							3	3	3	3
6KAF6H8390	**$100.00**	Bus Bars, IGBT, U V W	4X	3	3								
6KAF6H8392	**$230.00**	Bus Bars, Motor, 2	4X	3	3								
6KAF6H8383	**$260.00**	Bus Bars, Motor, U W	4X			2	2	2	2				
6KAF6H8384	**$215.00**	Bus Bars, Motor V	4X			1	1	1	1				
6KAF6H8389	**$220.00**	Bus Bars, I-Sensor	4X			3	3	3	3				
6KAF6H8602	**$1175.00**	Bus Bars, IGBT Output	5X							3	3	3	3
6KAF6H8603	**$1180.00**	Bus Bars, Over Fan Box	5X							3	3	3	3
6KAF6H8604	**$530.00**	Bus Bars, Current Sensor 5352	5X							3	3	3	
6KAF6H8605	**$550.00**	Bus Bars, Current Sensor 5452-5502	4X										3
6KAF6H8397	**$190.00**	Bus Bars, Brake Plus	4X	1	1								
6KAF6H8398	**$210.00**	Bus Bars, Brake Minus	4X	1	1								
6KAF6H8396	**$320.00**	Bus Bars, Brake	4X			1	1	1	1				
6KAF6H8606	**$8620.00**	Bus Bars, Brake Assy	5X							1	1	1	1
6KAF6H8401	**$475.00**	Bus Bars, Load Share Plus	4X	1	1								
6KAF6H8400	**$460.00**	Bus Bars, Load Share Minus	4X	1	1								
6KAF6H8403	**$855.00**	Bus Bars, Load Share Plus	4X			1	1	1	1				
6KAF6H8402	**$655.00**	Bus Bars, Load Share Minus	4X			1	1	1	1				
6KAF6H8607	**$2055.00**	Bus Bars, Load Share Plus	5X							1	1	1	1
6KAF6H8702	**$2520.00**	Bus Bars, Load Share Minus	5X							1	1	1	1
6KAF6H8405	**$1370.00**	Bus Bars, SCR Input 2	4X	3	3								
6KAF6H8406	**$835.00**	Bus Bars, SCR, T, 1	4X			3	3	3	3				

AF-600FP™ Enclosed Drive Panels

Product Description

The AF-600 FP™ Enclosed Drive Panel is an enclosed version of the stand-alone AF-600 FP Fan and Pump/Variable Torque drive and incorporates contactors, switches, pilot lights and drive bypass functionality. A full range of enclosed drives—in Type 1, slimline or standard, 12 or 3R enclosures—provides contractors a one-stop-shop source for their drive needs.

The available configurations include:

—208Vac, 460Vac and 575Vac offerings
—Up to 300HP in standard offering
—Up to 500HP available as factory quote
—Up to 650HP in Disconnect Drive
—Up to 1000HP MultiPulse panels (e.g., 12, 18 or 24 pulse) available as factory quote

—Slimline NEMA Type 1 enclosure (standard on lower HP units)
—Traditional NEMA Type 1 enclosure (standard on higher HP units; optional on some lower HP units)
—Traditional NEMA Type 12 enclosure
—Traditional NEMA 3R enclosure

—Disconnect Drive with compact size
—Non-bypass with full feature set
—Drive +2 contactor bypass with full feature set
—Drive +3 contactor bypass with full feature set
—Drive with Redundant Drive bypass to maximize run time performance

The AF-600 FP Panel slimline enclosure saves on space and can reduce installation time in tight spaces. In addition, AF-600 FP Panels can be mounted in "C" channels, further simplifying installation.

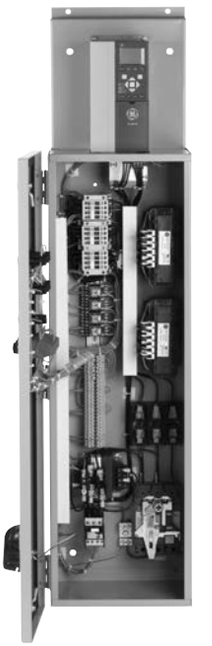

Visit http://www.geindustrial.com/drives for additional product information including programming guides, drawings, programming software, an energy savings calculator, and much more.

Product Numbering System Diagram

(Product number for illustrative purposes only)

Description	6K	FP	X	X	NNN	N	X	X	N/X	N/X	N/X

GE Product Code

Drive Type
- FP = AF-600FP

Input Voltage
- C = 208V
- H = 460V
- N = 575V

Configuration
- L = Disconnect Drive
- D = Non-Bypass
- 2 = 2 Contactor Bypass
- 3 = 3 Contactor Bypass
- R = Redundant Drive Bypass

HP Rating
- 003 = 3 HP
- 010 = 10 HP
- 100 = 100 HP

Enclosure Type

1 = Type 1	G = NEMA 1 with Conformal Coating
2 = Type 12	D = NEMA 12 with Conformal Coating
6 = Type 3R	R = NEMA 3R with Conformal Coating

Reactor
- R = Standard Reactor, eqv 5% Line Impedance
- F = Equivalent 8% Line Impedance
- C = 3% Load Reactor
- 2 = F + C
- V = 6.5% Line Impedance
- U = 1% Load Reactor

Disconnect/Circuit Breaker
- D = Disconnect, Fused (100k AIC)
- C = Circuit Breaker, Mag Break (65k AIC)

Communication Options
- X = Standard (Modbus RTU, Metasys N2 and Apogee FLN P1)
- B = Bacnet
- D = DeviceNet
- E = Ethernet IP
- L = LonWorks®
- M = ModBus TCP
- N = ProfiNet RT
- P = ProfiBus DP

Control Options

X = None	
A = Automatic Bypass	
G = Analog I/O Module	
M = Additional Input and Output	
R = Loss of Reference Control, Run @ Preset Speed	
S = Smoke Purge	
Y = Relay Output Module	
B = A + G	P = G + R + S
C = A + Y	Q = Y + R
D = A + G + R	T = Y + S
E = A + Y + R	U = M + R + S
F = A + G + S	V = Y + R + S
H = A + Y + S	W = R + S
J = A + G + R + S	
K = A + Y + R + S	
L = G + R	
N = G + S	
1 = A + M	6 = A + R + S
2 = A + R	7 = A + M + R + S
3 = A + S	8 = M + R
4 = A + M + R	9 = M + S
5 = A + M + S	

Operator Devices (Door Mounted)
- X = None (includes HOA)
- E = ETM
- K = Door mounted keypad and USB port
- L = Drive Run & Fault Pilot Lights
- P = Speed Pot
- 1 = E + L
- 2 = E + P
- 3 = L + P
- 4 = E + L + P

AF-600FP™ Enclosed Drive Panels
Enclosed Disconnect Drive Non-Bypass Pricing

As standard, all Enclosed Disconnect Drives include a fusible disconnect switch and fuses, an A2 rated EMI filter, Modbus RTU, Metasys N2, and Apgee FLN P1 communication protocols, and the equivalent of 5% line reactor

208 Vac, 3-Phase, 60Hz Input Power

Variable Torque HP Rating	AF-600 FP Panel Product No.	List Price GO-5FPP	List Price Adders, GO-5FPP							
			Conformal Coating	Circuit Breaker	8% AC Line Impedance[1]	6.5% AC Line Impedance[1]	3% Load Reactor	1.0% Load Reactor	Door Mounted Keypad	Communications & Option Boards
1	6KFPCL0011RDXXX	$1900.00	$210.00	$636.00	$469.00	$400.00	$603.00	N/A	N/A	All communication and option boards are field installable. Please select from core product.
2	6KFPCL0021RDXXX	$1940.00	$210.00	$636.00	$469.00	$400.00	$603.00	N/A	N/A	
3	6KFPCL0031RDXXX	$2065.00	$210.00	$636.00	$469.00	$400.00	$603.00	N/A	N/A	
5	6KFPCL0051RDXXX	$2500.00	$210.00	$636.00	$593.00	$510.00	$610.00	N/A	N/A	
7.5	6KFPCL0071RDXXX	$3000.00	$210.00	$636.00	$684.00	$585.00	$813.00	N/A	N/A	
10	6KFPCL0101RDXXX	$3440.00	$210.00	$636.00	$717.00	$610.00	$880.00	N/A	N/A	
15	6KFPCL0151RDXXX	$4170.00	$210.00	$636.00	$905.00	$775.00	$917.00	N/A	N/A	
20	6KFPCL0201RDXXX	$4935.00	$210.00	$755.00	$999.00	$850.00	$945.00	N/A	N/A	
25	6KFPCL0251RDXXX	$6075.00	$210.00	$766.00	$1170.00	$995.00	$1333.00	N/A	N/A	
30	6KFPCL0301RDXXX	$8910.00	$210.00	$766.00	$1170.00	$995.00	$1333.00	N/A	N/A	
40	6KFPCL0401RDXXX	$10680.00	$210.00	$1590.00	$1243.00	$1060.00	$1567.00	N/A	N/A	
50	6KFPCL0501RDXXX	$12170.00	$210.00	$1845.00	$1418.00	$1210.00	$2213.00	N/A	N/A	
60	6KFPCL0601RDXXX	$15440.00	$210.00	$1845.00	$1506.00	$1280.00	$2399.00	N/A	N/A	

460 Vac, 3-Phase, 60Hz Input Power

Variable Torque HP Rating	AF-600 FP Panel Product No.	List Price GO-5FPP	List Price Adders, GO-5FPP							
			Conformal Coating	Circuit Breaker	8% AC Line Impedance[1]	6.5% AC Line Impedance[1]	3% Load Reactor	1.0% Load Reactor	Door Mounted Keypad	Communications & Option Boards
1	6KFPHL0011RDXXX	$1990.00	$210.00	$636.00	$530.00	$455.00	$570.00	$485.00	N/A	All communication and option boards are field installable. Please select from core product.
2	6KFPHL0021RDXXX	$2025.00	$210.00	$636.00	$530.00	$455.00	$570.00	$485.00	N/A	
3	6KFPHL0031RDXXX	$2275.00	$210.00	$636.00	$530.00	$455.00	$570.00	$485.00	N/A	
5	6KFPHL0051RDXXX	$2510.00	$210.00	$636.00	$553.00	$470.00	$580.00	$495.00	N/A	
7.5	6KFPHL0071RDXXX	$2735.00	$210.00	$636.00	$620.00	$530.00	$603.00	$515.00	N/A	
10	6KFPHL0101RDXXX	$3125.00	$210.00	$636.00	$778.00	$665.00	$610.00	$520.00	N/A	
15	6KFPHL0151RDXXX	$3480.00	$210.00	$636.00	$808.00	$690.00	$813.00	$700.00	N/A	
20	6KFPHL0201RDXXX	$4010.00	$210.00	$636.00	$1069.00	$910.00	$880.00	$750.00	N/A	
25	6KFPHL0251RDXXX	$4525.00	$210.00	$636.00	$1069.00	$910.00	$880.00	$750.00	N/A	
30	6KFPHL0301RDXXX	$5450.00	$210.00	$636.00	$1214.00	$1035.00	$917.00	$780.00	N/A	
40	6KFPHL0401RDXXX	$7385.00	$210.00	$755.00	$1214.00	$1035.00	$945.00	$810.00	N/A	
50	6KFPHL0501RDXXX	$8155.00	$210.00	$766.00	$1266.00	$1080.00	$1333.00	$1135.00	N/A	
60	6KFPHL0601RDXXX	$9400.00	$210.00	$766.00	$1266.00	$1080.00	$1333.00	$1135.00	N/A	
75	6KFPHL0751RDXXX	$10875.00	$210.00	$1590.00	$1320.00	$1125.00	$1567.00	$1335.00	N/A	
100	6KFPHL1001RDXXX	$14325.00	$210.00	$1845.00	$1530.00	$1310.00	$2213.00	$1885.00	N/A	
125	6KFPHL1251RDXXX	$17235.00	$210.00	$1845.00	$1620.00	$1380.00	$2399.00	$2040.00	N/A	
150	6KFPHL1501RDXXX	$21770.00	$705.00	$1845.00	$1691.00	$1440.00	$2511.00	$2135.00	$600.00	
200	6KFPHL2001RDXXX	$25050.00	$705.00	$2575.00	$1850.00	$1575.00	$2570.00	$2185.00	$600.00	
250	6KFPHL2501RDXXX	$30210.00	$705.00	$2575.00	$1954.00	$1665.00	$2761.00	$2350.00	$600.00	
300	6KFPHL3001RDXXX	$35700.00	$705.00	$4191.00	$1954.00	$1665.00	$3104.00	$2640.00	$600.00	
350	6KFPHL3501RDXXX	$45000.00	$705.00	$5867.00	$2188.00	$1860.00	$3280.00	$2800.00	$600.00	
450	6KFPHL450GRDXXX	$60000.00	Std	$6845.00	$3000.00	$2550.00	$3565.00	$3026.00	$600.00	
500	6KFPHL500GRDXXX	$70000.00	Std	$8800.00	$3800.00	$3230.00	$4510.00	$3833.00	$600.00	
550	6KFPHL550GRDXXX	$80000.00	Std	$9780.00	$4200.00	$3570.00	$4985.00	$4237.00	$600.00	
600	6KFPHL600GRDXXX	$89000.00	Std	$10760.00	$4600.00	$3910.00	$5460.00	$4640.00	$600.00	

[1]Drive comes standard with 5% line impedance via DC Link Reactor.

AF-600FP™ Enclosed Drive Panels
Enclosed Disconnect Drive Non-Bypass Pricing

575 Vac, 3-Phase, 60Hz Input Power

Variable Torque HP Rating	AF-600 FP Panel Product No.	List Price GO-5FPP	List Price Adders, GO-5FPP							
			Conformal Coating	Circuit Breaker	8% AC Line Impedance[1]	6.5% AC Line Impedance[1]	3% Load Reactor	1.0% Load Reactor	Door Mounted Keypad	Communications & Option Boards
1	6KFPNL0011RDXXX	$2950.00	$210.00	$636.00	$530.00	$455.00	$570.00	$485.00	N/A	All communication and option boards are field installable. Please select from core product.
2	6KFPNL0021RDXXX	$3000.00	$210.00	$636.00	$530.00	$455.00	$570.00	$485.00	N/A	
3	6KFPNL0031RDXXX	$3100.00	$210.00	$636.00	$530.00	$455.00	$570.00	$485.00	N/A	
5	6KFPNL0051RDXXX	$3310.00	$210.00	$636.00	$553.00	$470.00	$580.00	$495.00	N/A	
7.5	6KFPNL0071RDXXX	$3600.00	$210.00	$636.00	$620.00	$530.00	$603.00	$515.00	N/A	
10	6KFPNL0101RDXXX	$4110.00	$210.00	$636.00	$778.00	$665.00	$610.00	$520.00	N/A	
15	6KFPNL0151RDXXX	$4635.00	$210.00	$636.00	$808.00	$690.00	$813.00	$700.00	N/A	
20	6KFPNL0201RDXXX	$5270.00	$210.00	$636.00	$1069.00	$910.00	$880.00	$750.00	N/A	
25	6KFPNL0251RDXXX	$5935.00	$210.00	$636.00	$1069.00	$910.00	$880.00	$750.00	N/A	
30	6KFPNL0301RDXXX	$7140.00	$210.00	$636.00	$1214.00	$1035.00	$917.00	$780.00	N/A	
40	6KFPNL0401RDXXX	$9660.00	$210.00	$755.00	$1214.00	$1035.00	$945.00	$810.00	N/A	
50	6KFPNL0501RDXXX	$10790.00	$210.00	$766.00	$1266.00	$1080.00	$1333.00	$1135.00	N/A	
60	6KFPNL0601RDXXX	$12310.00	$210.00	$766.00	$1266.00	$1080.00	$1333.00	$1135.00	N/A	
75	6KFPNL0751RDXXX	$14225.00	$210.00	$1590.00	$1320.00	$1125.00	$1567.00	$1335.00	N/A	
100	6KFPNL1001RDXXX	$18975.00	$210.00	$1845.00	$1530.00	$1310.00	$2213.00	$1885.00	N/A	
125	6KFPNL1251RDXXX	$22555.00	$210.00	$1845.00	$1620.00	$1380.00	$2399.00	$2040.00	N/A	
150	6KFPNL150GRDXXX	$34100.00	Std	$1845.00	$1691.00	$1440.00	$2511.00	$2135.00	$600.00	
200	6KFPNL200GRDXXX	$34760.00	Std	$2575.00	$1850.00	$1575.00	$2570.00	$2185.00	$600.00	
250	6KFPNL250GRDXXX	$41725.00	Std	$2575.00	$1954.00	$1665.00	$2761.00	$2350.00	$600.00	
300	6KFPNL300GRDXXX	$49135.00	Std	$4191.00	$1954.00	$1665.00	$3104.00	$2640.00	$600.00	
350	6KFPNL350GRDXXX	$60750.00	Std	$5867.00	$2188.00	$1860.00	$3280.00	$2800.00	$600.00	
400	6KFPNL400GRDXXX	$81000.00	Std	$6845.00	$3000.00	$2550.00	$3565.00	$3026.00	$600.00	
450	6KFPNL450GRDXXX	$94500.00	Std	$8800.00	$3800.00	$3230.00	$4510.00	$3833.00	$600.00	
500	6KFPNL500GRDXXX	$108000.00	Std	$9780.00	$4200.00	$3570.00	$4985.00	$4237.00	$600.00	
600	6KFPNL600GRDXXX	$120150.00	Std	$10760.00	$4600.00	$3910.00	$5460.00	$4640.00	$600.00	
650	6KFPNL650GRDXXX	$130950.00	Std	$11725.00	$5000.00	$4250.00	$5935.00	$5050.00	$600.00	

[1]Drive comes standard with 5% line impedance via DC Link Reactor.

AF-600FP™ Enclosed Drive Panels
Enclosed Non-Bypass Drives Pricing

As standard, all Enclosed Non-Bypass Drives include a fusible disconnect switch and fuses, a door-mounted keypad, an HOA operator, an E-Stop button (for UL508A compliance), power on and enable lights, a customer terminal board for control connection, an A2 rated EMI filter, Modbus RTU, Metasys N2, and Apgee FLN P1 communication protocols and the equivalent of 5% line reactor.

208 Vac, 3-Phase, 60Hz Input Power

Variable Torque HP Rating	AF-600 FP Panel Product No.	Max. Cont. Current	List Price GO-5FPP	List Price Adders, GO-5FPP: NEMA 12 Enclosure	NEMA 3R Enclosure	Conformal Coating	8% AC Line Impedance[1]	3% Load Reactor	Circuit Breaker
2	6KFPCD0021RDXXX	7.5	$2088.00	$570.00	$1000.00	$210.00	$469.00	$603.00	$636.00
3	6KFPCD0031RDXXX	10.6	$2215.00	$570.00	$1000.00	$210.00	$469.00	$603.00	$636.00
5	6KFPCD0051RDXXX	16.7	$2642.00	$570.00	$1000.00	$210.00	$593.00	$610.00	$636.00
7.5	6KFPCD0071RDXXX	24.2	$3198.00	$590.00	$1500.00	$210.00	$684.00	$813.00	$636.00
10	6KFPCD0101RDXXX	30.8	$3636.00	$590.00	$1500.00	$210.00	$717.00	$880.00	$636.00
15	6KFPCD0151RDXXX	46.2	$4369.00	$590.00	$1750.00	$210.00	$905.00	$917.00	$636.00
20	6KFPCD0201RDXXX	59.4	$5135.00	$740.00	$1750.00	$210.00	$999.00	$945.00	$755.00
25	6KFPCD0251RDXXX	74.8	$6373.00	$740.00	$2000.00	$210.00	$1170.00	$1333.00	$766.00
30	6KFPCD0301RDXXX	88.0	$9210.00	$740.00	$2000.00	$210.00	$1170.00	$1333.00	$766.00
40	6KFPCD0401RDXXX	115	$11180.00	$894.00	$2500.00	$210.00	$1243.00	$1567.00	$1590.00
50	6KFPCD0501RDXXX	143	$12670.00	$1014.00	$3500.00	$210.00	$1418.00	$2213.00	$1845.00
60	6KFPCD0601RDXXX	170	$15938.00	$1275.00	$3500.00	$210.00	$1506.00	$2399.00	$1845.00

460 Vac, 3-Phase, 60Hz Input Power

Variable Torque HP Rating	AF-600 FP Panel Product No.	Max. Cont. Current	List Price GO-5FPP	List Price Adders, GO-5FPP: NEMA 12 Enclosure	NEMA 3R Enclosure	Conformal Coating	8% AC Line Impedance[1]	3% Load Reactor	Circuit Breaker
2	6KFPHD0021RDXXX	3.4	$2175.00	$570.00	$1000.00	$210.00	$530.00	$570.00	$636.00
3	6KFPHD0031RDXXX	4.8	$2422.00	$570.00	$1000.00	$210.00	$530.00	$570.00	$636.00
5	6KFPHD0051RDXXX	8.2	$2657.00	$570.00	$1000.00	$210.00	$553.00	$580.00	$636.00
7.5	6KFPHD0071RDXXX	11.0	$2882.00	$570.00	$1250.00	$210.00	$620.00	$603.00	$636.00
10	6KFPHD0101RDXXX	14.5	$3271.00	$570.00	$1250.00	$210.00	$778.00	$610.00	$636.00
15	6KFPHD0151RDXXX	21.0	$3679.00	$570.00	$1500.00	$210.00	$808.00	$813.00	$636.00
20	6KFPHD0201RDXXX	27.0	$4208.00	$590.00	$1500.00	$210.00	$1069.00	$880.00	$636.00
25	6KFPHD0251RDXXX	34.0	$4719.00	$590.00	$1750.00	$210.00	$1069.00	$880.00	$636.00
30	6KFPHD0301RDXXX	40.0	$5644.00	$590.00	$1750.00	$210.00	$1214.00	$917.00	$636.00
40	6KFPHD0401RDXXX	52.0	$7582.00	$740.00	$1750.00	$210.00	$1214.00	$945.00	$755.00
50	6KFPHD0501RDXXX	65.0	$8453.00	$740.00	$2000.00	$210.00	$1266.00	$1333.00	$766.00
60	6KFPHD0601RDXXX	80.0	$9697.00	$740.00	$2000.00	$210.00	$1266.00	$1333.00	$766.00
75	6KFPHD0751RDXXX	105.0	$11174.00	$890.00	$2500.00	$210.00	$1320.00	$1567.00	$1590.00
100	6KFPHD1001RDXXX	130	$14824.00	$1186.00	$3500.00	$210.00	$1530.00	$2213.00	$1845.00
125	6KFPHD1251RDXXX	160	$17735.00	$1419.00	$3500.00	$210.00	$1620.00	$2399.00	$1845.00
150	6KFPHD1501RDXXX	190	$22466.00	$1797.00	$4000.00	$705.00	$1691.00	$2511.00	$1845.00
200	6KFPHD2001RDXXX	240	$25745.00	$2060.00	N/A	$705.00	$1850.00	$2570.00	$2575.00
250	6KFPHD2501RDXXX	302	$30906.00	$2472.00	N/A	$705.00	$1954.00	$2761.00	$2575.00
300	6KFPHD3001RDXXX	361	$36396.00	$2912.00	N/A	$705.00	$1954.00	$3104.00	$4191.00

575 Vac, 3-Phase, 60Hz Input Power

Variable Torque HP Rating	AF-600 FP Panel Product No.	Max. Cont. Current	List Price GO-5FPP	List Price Adders, GO-5FPP: NEMA 12 Enclosure	NEMA 3R Enclosure	Conformal Coating	8% AC Line Impedance[1]	3% Load Reactor	Circuit Breaker
2	6KFPND0021RDXXX	2.7	$3150.00	$570.00	$1000.00	$210.00	$530.00	$570.00	$636.00
3	6KFPND0031RDXXX	3.9	$3250.00	$570.00	$1000.00	$210.00	$530.00	$570.00	$636.00
5	6KFPND0051RDXXX	6.1	$3454.00	$570.00	$1000.00	$210.00	$553.00	$580.00	$636.00
7.5	6KFPND0071RDXXX	9.0	$3745.00	$570.00	$1250.00	$210.00	$620.00	$603.00	$636.00
10	6KFPND0101RDXXX	11.0	$4252.00	$570.00	$1250.00	$210.00	$778.00	$610.00	$636.00
15	6KFPND0151RDXXX	18.0	$4783.00	$570.00	$1500.00	$210.00	$808.00	$813.00	$636.00
20	6KFPND0201RDXXX	22.0	$5470.00	$590.00	$1500.00	$210.00	$1069.00	$880.00	$636.00
25	6KFPND0251RDXXX	27.0	$6135.00	$590.00	$1750.00	$210.00	$1069.00	$880.00	$636.00
30	6KFPND0301RDXXX	34.0	$7337.00	$590.00	$1750.00	$210.00	$1214.00	$917.00	$636.00
40	6KFPND0401RDXXX	41.0	$9856.00	$740.00	$1750.00	$210.00	$1214.00	$945.00	$755.00
50	6KFPND0501RDXXX	52.0	$10990.00	$740.00	$2000.00	$210.00	$1266.00	$1333.00	$766.00
60	6KFPND0601RDXXX	62.0	$12606.00	$740.00	$2000.00	$210.00	$1266.00	$1333.00	$766.00
75	6KFPND0751RDXXX	83.0	$14525.00	$890.00	$2500.00	$210.00	$1320.00	$1567.00	$1590.00
100	6KFPND1001RDXXX	100	$19271.00	$1542.00	$3500.00	$210.00	$1530.00	$2213.00	$1845.00
125	6KFPND1251RDXXX	131	$23055.00	$1844.00	$3500.00	$210.00	$1620.00	$2399.00	$1845.00
150	6KFPND1501RDXXX	155	$34583.00	$2767.00	$4000.00	$705.00	$1691.00	$2511.00	$1845.00

[1]Drive comes standard with 5% line impedance via DC Link Reactor.

AF-600FP™ Enclosed Drive Panels
Enclosed 2 Contactor Bypass Drives Pricing

As standard, all Enclosed 2 Contactor Bypass Drives include a fusible disconnect switch and fuses, a door-mounted keypad, an HOA operator, an E-Stop button (for UL508A compliance), a Drive/Off/Bypass switch, power on, enable, bypass and overload lights, a customer terminal board for control connection, an A2 rated EMI filter, Modbus RTU, Metasys N2, and Apgee FLN P1 communication protocols, the equivalent of 5% line reactor, a drive output contactor interlocked with an FVNR bypass contactor, and Class 20/30 overloads.

208 Vac, 3-Phase, 60Hz Input Power

Variable Torque HP Rating	AF-600 FP Panel Product No.	Max. Cont. Current	List Price GO-5FPP	List Price Adders, GO-5FPP					
				NEMA 12 Enclosure	NEMA 3R Enclosure	Conformal Coating	8% AC Line Impedance[1]	3% Load Reactor	Circuit Breaker
2	6KFPC20021RDXXX	7.5	$2150.00	$570.00	$1000.00	$210.00	$469.00	$603.00	$636.00
3	6KFPC20031RDXXX	10.6	$2392.00	$570.00	$1000.00	$210.00	$469.00	$603.00	$636.00
5	6KFPC20051RDXXX	16.7	$2833.00	$570.00	$1000.00	$210.00	$593.00	$610.00	$636.00
7.5	6KFPC20071RDXXX	24.2	$3456.00	$590.00	$1500.00	$210.00	$684.00	$813.00	$636.00
10	6KFPC20101RDXXX	30.8	$4135.00	$590.00	$1500.00	$210.00	$717.00	$880.00	$636.00
15	6KFPC20151RDXXX	46.2	$4872.00	$590.00	$1750.00	$210.00	$905.00	$917.00	$636.00
20	6KFPC20201RDXXX	59.4	$5823.00	$590.00	$1750.00	$210.00	$999.00	$945.00	$755.00
25	6KFPC20251RDXXX	74.8	$7226.00	$590.00	$2000.00	$210.00	$1170.00	$1333.00	$766.00
30	6KFPC20301RDXXX	88.0	$10857.00	$590.00	$2000.00	$210.00	$1170.00	$1333.00	$766.00
40	6KFPC20401RDXXX	115	$13598.00	$1088.00	$2500.00	$210.00	$1243.00	$1567.00	$1590.00
50	6KFPC20501RDXXX	143	$16048.00	$1284.00	$3500.00	$210.00	$1418.00	$2213.00	$1845.00
60	6KFPC20601RDXXX	170	$19626.00	$1570.00	$3500.00	$210.00	$1506.00	$2399.00	$1845.00

460 Vac, 3-Phase, 60Hz Input Power

Variable Torque HP Rating	AF-600 FP Panel Product No.	Max. Cont. Current	List Price GO-5FPP	List Price Adders, GO-5FPP					
				NEMA 12 Enclosure	NEMA 3R Enclosure	Conformal Coating	8% AC Line Impedance[1]	3% Load Reactor	Circuit Breaker
2	6KFPH20021RDXXX	3.4	$2230.00	$570.00	$1000.00	$210.00	$530.00	$570.00	$636.00
3	6KFPH20031RDXXX	4.8	$2532.00	$570.00	$1000.00	$210.00	$530.00	$570.00	$636.00
5	6KFPH20051RDXXX	8.2	$2760.00	$570.00	$1000.00	$210.00	$553.00	$580.00	$636.00
7.5	6KFPH20071RDXXX	11.0	$3019.00	$570.00	$1250.00	$210.00	$620.00	$603.00	$636.00
10	6KFPH20101RDXXX	14.5	$3458.00	$570.00	$1250.00	$210.00	$778.00	$610.00	$636.00
15	6KFPH20151RDXXX	21.0	$3906.00	$570.00	$1500.00	$210.00	$808.00	$813.00	$636.00
20	6KFPH20201RDXXX	27.0	$4404.00	$590.00	$1500.00	$210.00	$1069.00	$880.00	$636.00
25	6KFPH20251RDXXX	34.0	$5093.00	$590.00	$1750.00	$210.00	$1069.00	$880.00	$636 .00
30	6KFPH20301RDXXX	40.0	$6129.00	$590.00	$1750.00	$210.00	$1214.00	$917.00	$636.00
40	6KFPH20401RDXXX	52.0	$8042.00	$740.00	$1750.00	$210.00	$1214.00	$945.00	$755.00
50	6KFPH20501RDXXX	65.0	$8913.00	$740.00	$2000.00	$210.00	$1266.00	$1333.00	$766.00
60	6KFPH20601RDXXX	80.0	$10091.00	$740.00	$2000.00	$210.00	$1266.00	$1333.00	$766.00
75	6KFPH20751RDXXX	105.0	$12009.00	$890.00	$2500.00	$210.00	$1320.00	$1567.00	$1590.00
100	6KFPH21001RDXXX	130	$16205.00	$1296.00	$3500.00	$210.00	$1530.00	$2213.00	$1845.00
125	6KFPH21251RDXXX	160	$19386.00	$1551.00	$3500.00	$210.00	$1620.00	$2399.00	$1845.00
150	6KFPH21501RDXXX	190	$24028.00	$1922.00	$4000.00	$705.00	$1691.00	$2511.00	$1845.00
200	6KFPH22001RDXXX	240	$28075.00	$2246.00	N/A	$705.00	$1850.00	$2570.00	$2575.00
250	6KFPH22501RDXXX	302	$33861.00	$2709.00	N/A	$705.00	$1954.00	$2761.00	$2575.00
300	6KFPH23001RDXXX	361	$41574.00	$3326.00	N/A	$705.00	$1954.00	$3104.00	$4191.00

575 Vac, 3-Phase, 60Hz Input Power

Variable Torque HP Rating	AF-600 FP Panel Product No.	Max. Cont. Current	List Price GO-5FPP	List Price Adders, GO-5FPP					
				NEMA 12 Enclosure	NEMA 3R Enclosure	Conformal Coating	8% AC Line Impedance[1]	3% Load Reactor	Circuit Breaker
2	6KFPN20021RDXXX	2.7	$3291.00	$570.00	$1000.00	$210.00	$530.00	$570.00	$636.00
3	6KFPN20031RDXXX	3.9	$3450.00	$570.00	$1000.00	$210.00	$530.00	$570.00	$636.00
5	6KFPN20051RDXXX	6.1	$3588.00	$570.00	$1000.00	$210.00	$553.00	$580.00	$636.00
7.5	6KFPN20071RDXXX	9.0	$3925.00	$570.00	$1250.00	$210.00	$620.00	$603.00	$636.00
10	6KFPN20101RDXXX	11.0	$4495.00	$570.00	$1250.00	$210.00	$778.00	$610.00	$636.00
15	6KFPN20151RDXXX	18.0	$5368.00	$570.00	$1500.00	$210.00	$808.00	$813.00	$636.00
20	6KFPN20201RDXXX	22.0	$5859.00	$590.00	$1500.00	$210.00	$1069.00	$880.00	$636.00
25	6KFPN20251RDXXX	27.0	$6620.00	$590.00	$1750.00	$210.00	$1069.00	$880.00	$636.00
30	6KFPN20301RDXXX	34.0	$7968.00	$590.00	$1750.00	$210.00	$1214.00	$917.00	$636.00
40	6KFPN20401RDXXX	41.0	$10454.00	$740.00	$1750.00	$210.00	$1214.00	$945.00	$755.00
50	6KFPN20501RDXXX	52.0	$11587.00	$740.00	$2000.00	$210.00	$1266.00	$1333.00	$766.00
60	6KFPN20601RDXXX	62.0	$13118.00	$740.00	$2000.00	$210.00	$1266.00	$1333.00	$766.00
75	6KFPN20751RDXXX	83.0	$15612.00	$890.00	$2500.00	$210.00	$1320.00	$1567.00	$1590.00
100	6KFPN21001RDXXX	100	$21066.00	$1685.00	$3500.00	$210.00	$1530.00	$2213.00	$1845.00
125	6KFPN21251RDXXX	131	$25201.00	$2016.00	$3500.00	$210.00	$1620.00	$2399.00	$1845.00
150	6KFPN21501RDXXX	155	$37802.00	$3024.00	$4000.00	$705.00	$1691.00	$2511.00	$1845.00

[1]Drive comes standard with 5% line impedance via DC Link Reactor.

AF-600FP™ Enclosed Drive Panels
Enclosed 3 Contactor Bypass Drives Pricing

As standard, all Enclosed 3 Contactor Bypass Drives include a fusible disconnect switch and fuses, a door-mounted keypad, an HOA operator, an E-Stop button (for UL508A compliance), a Drive/Off/Bypass switch, a Test/Isolate/Normal switch, power on, enable, bypass and overload lights, a customer terminal board for control connection, an A2 rated EMI filter, Modbus RTU, Metasys N2, and Apgee FLN P1 communication protocols, the equivalent of 5% line reactor, a drive output contactor interlocked with an FVNR bypass contactor, a drive line isolation contactor, and Class 20/30 overloads.

208 Vac, 3-Phase, 60Hz Input Power

Variable Torque HP Rating	AF-600 FP Panel Product No.	Max. Cont. Current	List Price GO-5FPP	List Price Adders, GO-5FPP					
				NEMA 12 Enclosure	NEMA 3R Enclosure	Conformal Coating	8% AC Line Impedance[1]	3% Load Reactor	Circuit Breaker
2	6KFPC30021RDXXX	7.5	$2345.00	$570.00	$1000.00	$210.00	$469.00	$603.00	$636.00
3	6KFPC30031RDXXX	10.6	$2662.00	$570.00	$1000.00	$210.00	$469.00	$603.00	$636.00
5	6KFPC30051RDXXX	16.7	$3133.00	$570.00	$1000.00	$210.00	$593.00	$610.00	$636.00
7.5	6KFPC30071RDXXX	24.2	$3752.00	$590.00	$1500.00	$210.00	$684.00	$813.00	$636.00
10	6KFPC30101RDXXX	30.8	$4589.00	$590.00	$1500.00	$210.00	$717.00	$880.00	$636.00
15	6KFPC30151RDXXX	46.2	$5347.00	$590.00	$1750.00	$210.00	$905.00	$917.00	$636.00
20	6KFPC30201RDXXX	59.4	$6312.00	$590.00	$1750.00	$210.00	$999.00	$945.00	$755.00
25	6KFPC30251RDXXX	74.8	$7776.00	$590.00	$2000.00	$210.00	$1170.00	$1333.00	$766.00
30	6KFPC30301RDXXX	88.0	$11812.00	$590.00	$2000.00	$210.00	$1170.00	$1333.00	$766.00
40	6KFPC30401RDXXX	115	$14773.00	$1182.00	$2500.00	$210.00	$1243.00	$1567.00	$1590.00
50	6KFPC30501RDXXX	143	$17138.00	$1371.00	$3500.00	$210.00	$1418.00	$2213.00	$1845.00
60	6KFPC30601RDXXX	170	$20811.00	$1665.00	$3500.00	$210.00	$1506.00	$2399.00	$1845.00

460 Vac, 3-Phase, 60Hz Input Power

Variable Torque HP Rating	AF-600 FP Panel Product No.	Max. Cont. Current	List Price GO-5FPP	List Price Adders, GO-5FPP					
				NEMA 12 Enclosure	NEMA 3R Enclosure	Conformal Coating	8% AC Line Impedance[1]	3% Load Reactor	Circuit Breaker
2	6KFPH30021RDXXX	3.4	$2450.00	$570.00	$1000.00	$210.00	$530.00	$570.00	$636.00
3	6KFPH30031RDXXX	4.8	$2697.00	$570.00	$1000.00	$210.00	$530.00	$570.00	$636.00
5	6KFPH30051RDXXX	8.2	$2955.00	$570.00	$1000.00	$210.00	$553.00	$580.00	$636.00
7.5	6KFPH30071RDXXX	11.0	$3252.00	$570.00	$1250.00	$210.00	$620.00	$603.00	$636.00
10	6KFPH30101RDXXX	14.5	$3661.00	$570.00	$1250.00	$210.00	$778.00	$610.00	$636.00
15	6KFPH30151RDXXX	21.0	$4129.00	$570.00	$1500.00	$210.00	$808.00	$813.00	$636.00
20	6KFPH30201RDXXX	27.0	$4667.00	$590.00	$1500.00	$210.00	$1069.00	$880.00	$636.00
25	6KFPH30251RDXXX	34.0	$5393.00	$590.00	$1750.00	$210.00	$1069.00	$880.00	$636.00
30	6KFPH30301RDXXX	40.0	$6474.00	$590.00	$1750.00	$210.00	$1214.00	$917.00	$636.00
40	6KFPH30401RDXXX	52.0	$8503.00	$740.00	$1750.00	$210.00	$1214.00	$945.00	$755.00
50	6KFPH30501RDXXX	65.0	$9433.00	$740.00	$2000.00	$210.00	$1266.00	$1333.00	$766.00
60	6KFPH30601RDXXX	80.0	$10596.00	$740.00	$2000.00	$210.00	$1266.00	$1333.00	$766.00
75	6KFPH30751RDXXX	105.0	$12709.00	$890.00	$2500.00	$210.00	$1320.00	$1567.00	$1590.00
100	6KFPH31001RDXXX	130	$17105.00	$1368.00	$3500.00	$210.00	$1530.00	$2213.00	$1845.00
125	6KFPH31251RDXXX	160	$20335.00	$1627.00	$3500.00	$210.00	$1620.00	$2399.00	$1845.00
150	6KFPH31501RDXXX	190	$25250.00	$2020.00	$4000.00	$705.00	$1691.00	$2511.00	$1845.00
200	6KFPH32001RDXXX	240	$29639.00	$2371.00	N/A	$705.00	$1850.00	$2570.00	$2575.00
250	6KFPH32501RDXXX	302	$35526.00	$2842.00	N/A	$705.00	$1954.00	$2761.00	$2575.00
300	6KFPH33001RDXXX	361	$43786.00	$3503.00	N/A	$705.00	$1954.00	$3104.00	$4191.00

575 Vac, 3-Phase, 60Hz Input Power

Variable Torque HP Rating	AF-600 FP Panel Product No.	Max. Cont. Current	List Price GO-5FPP	List Price Adders, GO-5FPP					
				NEMA 12 Enclosure	NEMA 3R Enclosure	Conformal Coating	8% AC Line Impedance[1]	3% Load Reactor	Circuit Breaker
2	6KFPN30021RDXXX	2.7	$3485.00	$570.00	$1000.00	$210.00	$530.00	$570.00	$636.00
3	6KFPN30031RDXXX	3.9	$3600.00	$570.00	$1000.00	$210.00	$530.00	$570.00	$636.00
5	6KFPN30051RDXXX	6.1	$3842.00	$570.00	$1000.00	$210.00	$553.00	$580.00	$636.00
7.5	6KFPN30071RDXXX	9.0	$4228.00	$570.00	$1250.00	$210.00	$620.00	$603.00	$636.00
10	6KFPN30101RDXXX	11.0	$4759.00	$570.00	$1250.00	$210.00	$778.00	$610.00	$636.00
15	6KFPN30151RDXXX	18.0	$5725.00	$570.00	$1500.00	$210.00	$808.00	$813.00	$636.00
20	6KFPN30201RDXXX	22.0	$6067.00	$590.00	$1500.00	$210.00	$1069.00	$880.00	$636.00
25	6KFPN30251RDXXX	27.0	$7011.00	$590.00	$1750.00	$210.00	$1069.00	$880.00	$636.00
30	6KFPN30301RDXXX	34.0	$8416.00	$590.00	$1750.00	$210.00	$1214.00	$917.00	$636.00
40	6KFPN30401RDXXX	41.0	$11054.00	$740.00	$1750.00	$210.00	$1214.00	$945.00	$755.00
50	6KFPN30501RDXXX	52.0	$12263.00	$740.00	$2000.00	$210.00	$1266.00	$1333.00	$766.00
60	6KFPN30601RDXXX	62.0	$13775.00	$740.00	$2000.00	$210.00	$1266.00	$1333.00	$766.00
75	6KFPN30751RDXXX	83.0	$16522.00	$890.00	$2500.00	$210.00	$1320.00	$1567.00	$1590.00
100	6KFPN31001RDXXX	100	$22237.00	$1779.00	$3500.00	$210.00	$1530.00	$2213.00	$1845.00
125	6KFPN31251RDXXX	131	$26436.00	$2115.00	$3500.00	$210.00	$1620.00	$2399.00	$1845.00
150	6KFPN31501RDXXX	155	$39654.00	$3172.00	$4000.00	$705.00	$1691.00	$2511.00	$1845.00

[1]Drive comes standard with 5% line impedance via DC Link Reactor.

AF-600FP™ Enclosed Drive Panels

Enclosed Redundant Drive Bypass Pricing

As standard, all Enclosed Redundant Drives include two door-mounted keypads, an HOA operator, an E-Stop button (for UL508A compliance), a Drive 1 / Off / Drive 2 switch, a power on light, individual drive run and fault lights, a customer terminal board for control connections, A2 rated EMI filters, Modbus RTU, Metasys N2, and Apgee FLN P1 communication protocols, the equivalent of 5% line reactors, and two interlocked drive output contactors.

460 Vac, 3-Phase, 60Hz Input Power

Variable Torque HP Rating	AF-600 FP Panel Product No.	List Price GO-5FPP	List Price Adders, GO-5FPP: Traditional NEMA 1 Enclosure	List Price Adders, GO-5FPP: 8% AC Line Impedance[1]	Communications
15	6KFPHR0151RDXXX	**$6800.00**	**$500.00**	**$808.00**	Use characters and adders listed under Communication Options. One card will be provided for each drive so the adder shown should be doubled (e.g., $600 for a single drive, $1200 for a Redundant drive).
20	6KFPHR0201RDXXX	**$7800.00**	**$500.00**	**$1069.00**	
25	6KFPHR0251RDXXX	**$9800.00**	**$500.00**	**$1069.00**	
30	6KFPHR0301RDXXX	**$11000.00**	**$500.00**	**$1214.00**	
40	6KFPHR0401RDXXX	**$12000.00**	**$500.00**	**$1214.00**	
50	6KFPHR0501RDXXX	**$14000.00**	**$500.00**	**$1266.00**	
60	6KFPHR0601RDXXX	**$16500.00**	**N/A**	**$1266.00**	
75	6KFPHR0751RDXXX	**$20000.00**	**N/A**	**$1320.00**	
100	6KFPHR1001RDXXX	**$24500.00**	**N/A**	**$1530.00**	
125	6KFPHR1251RDXXX	**$30000.00**	**N/A**	**$1620.00**	

[1]Each drive comes standard with 5% line impedance via DC Link Reactor.

AF-600FP Enclosed Bypass Drives Options Pricing

Operator Devices

Option Description	Option Code	List Adder
None (Includes HOA)	X	**$0.00**
Elapsed Time Meter (ETM)	E	**$275.00**
Drive Run & Fault Pilot Lights	L	**$250.00**
Speed Potentiometer	P	**$115.00**

Control Options

Option Description	Option Code	List Adder
None	X	**$0.00**
Automatic Bypass[1]	A	**$200.00**
Additional Input and Output[2,5]	M	**$600.00**
Loss of Reference Control, Run @ Preset Speed[3]	R	**$50.00**
Smoke Purge	S	**$50.00**
Analog I/O Module[5]	G	**$500.00**
Relay Output Module[5]	Y	**$475.00**

Communication Options

Option Description	Option Code	List Adder
Standard (Modbus RTU, Metasys N2 and Apogee FLN P1)	X	**$0.00**
Ethernet IP[4]	E	**$700.00**
LonWorks™	L	**$600.00**
Bacnet™	B	**$600.00**
DeviceNet	D	**$600.00**
ModBus TCP[4]	M	**$700.00**
ProfiBus DP	P	**$725.00**
ProfiNet RT	N	**$700.00**

[1]Automatic Bypass is only available on 2 or 3 contactor units.
[2]General Purpose I/O – OPCGPIO (24V DIO, 0-10V input, second 4-20mA AO).
[3]Applies to 4-20mA Analog Speed Reference only.
[4]The Ethernet IP and ModBus TCP communication cards use two option slots. When either is installed, no other option card can be supplied.
[5]Only one Control Option Card can be installed at a time.

Model Number and Pricing Example

Description:

460Vac, 25 HP HVAC 3 Contactor Bypass Drive with 5% AC Line Impedance, NEMA 1 Enclosure, Additional I/O, Smoke Purge, and Metasys N2™ Communications

Model Number: 6KFPH30251FDX9X

460Vac, 25 HP 3 contactor bypass drive base list price:	**$5393.00**
5% AC Line Impedance list adder:	**$0.00**
Additional I/O adder:	**$600.00**
Smoke Purge list adder:	**$50.00**
Metasys N2™ list adder:	**$0.00**
Total List Price	**$6043.00**

Outline Dimensions & Weights for Type 1 Enclosures

Enclosed Drive	Enclosure Type	Weight (lbs)	Weight (kgs)	H x W x D (in)	H x W x D (mm)
2-5 HP@208V, 2-10 HP@460V & 2-10 HP@575V	Slimline	175	79	53.9 x 13.1 x 13.56	1370 x 333 x 345
7.5-20 HP@208V, 15-40 HP@460V & 15-40 HP@575V	Slimline	327	149	70.24 x 17.1 x 15.56	1784 x 435 x 396
25-30 HP@208V, 50-75 HP@460V & 50-75 HP@575V	Slimline	448	203	72.24 x 24 x 17.56	1835 x 610 x 446
40-60 HP@208V, 100-125 HP@460V & 100-125 HP@575V	Traditional	624	283	78.1 x 33.69 x 22.36	1983 x 856 x 568
150-300 HP@460V & 150 HP@575V	Traditional	1497	679	94.24 x 43.76 x 25.8	2394 x 1112 x 655

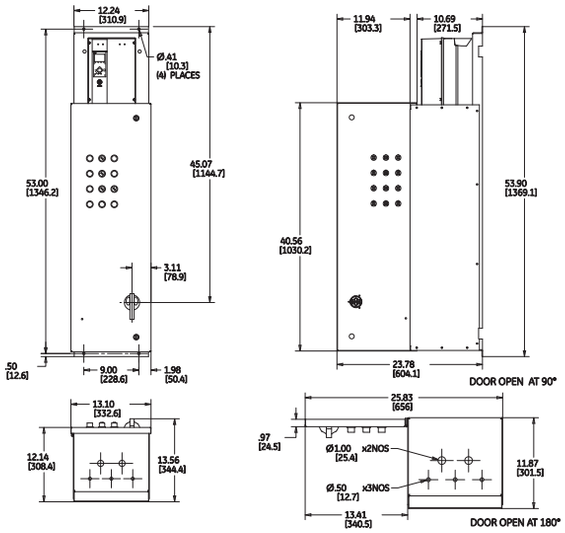

2-5 HP@208V, 2-10 HP@460V & 2-10 HP@575V

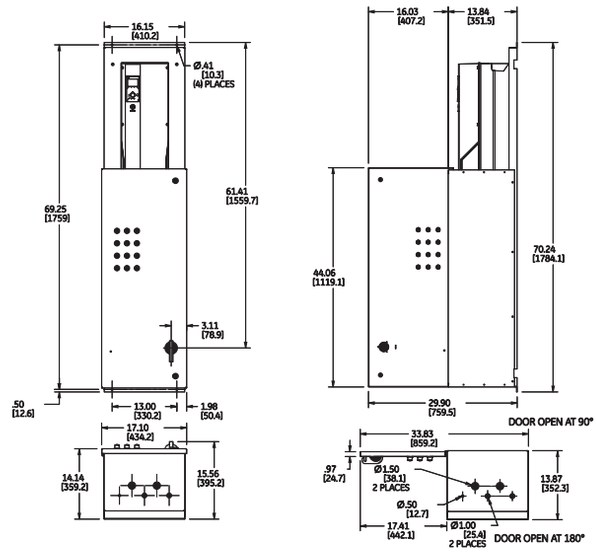

7.5-20 HP@208V, 15-40 HP@460V & 15-40 HP@575V

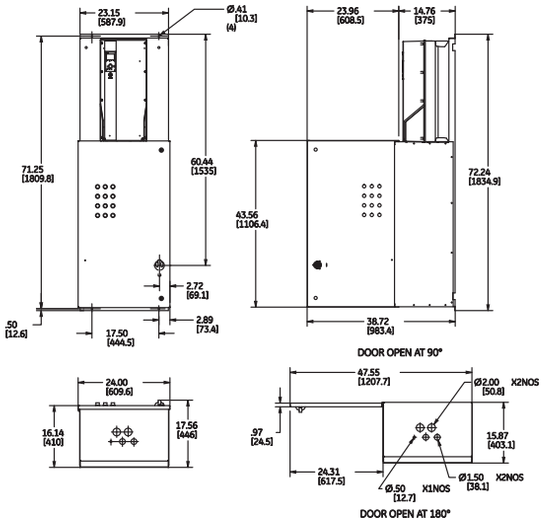

25-30 HP@208V, 50-75 HP@460V & 50-75 HP@575V

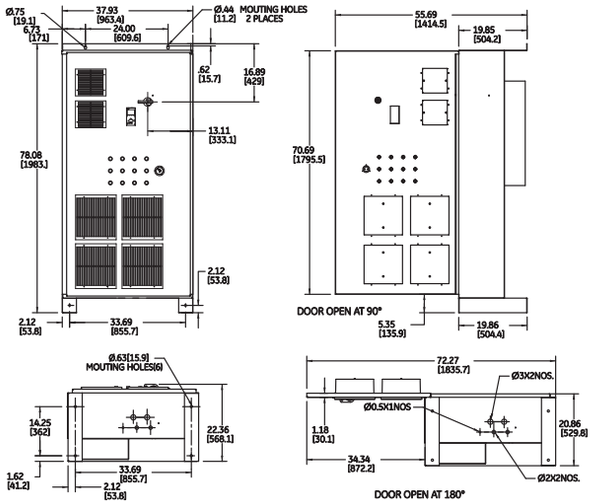

40-60 HP@208V, 100-125 HP@460V & 100-125 HP@575V

AF-600FP™ Enclosed Drive Panels
Dimensional Drawings

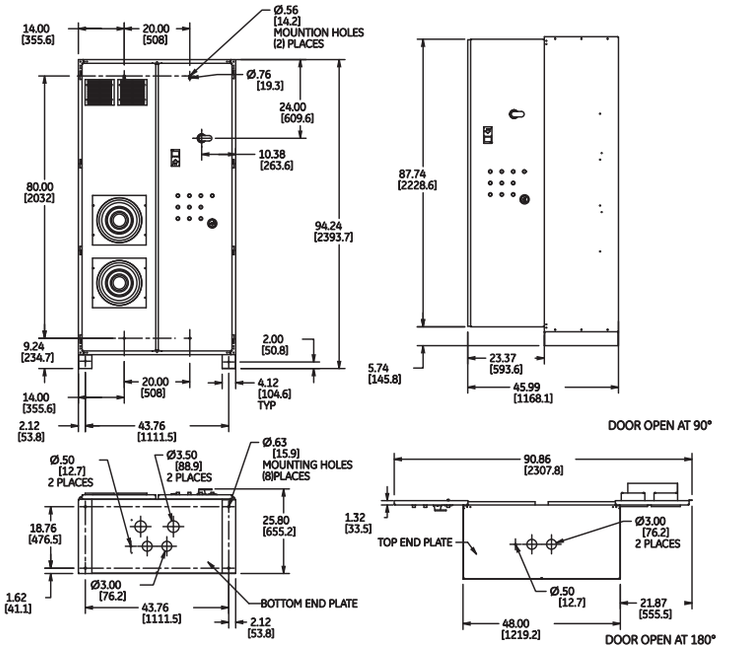

150-300 HP@460V & 150 HP@575V

Outline Dimensions & Weights for Type 12 Enclosures

Enclosed Drive	Enclosure Type	Weight (lbs)	Weight (kgs)	H x W x D (in)	H x W x D (mm)	Drawing #
2-5 HP@208V, 2-10 HP@460V & 2-10 HP@575V	Traditional	228	104	42.24 x 23.94 x 14.81	1073 x 608 x 376	55-217706
7.5-20 HP@208V, 15-40 HP@460V & 15-40 HP@575V	Traditional	429	195	56.18 x 30.94 x 18.25	1427 x 786 x 464	55-217707
25-30 HP@208V, 50-75 HP@460V & 50-75 HP@575V	Traditional	562	256	64.21 x 33.21 x 21.66	1631 x 844 x 5501	55-217708
40-60 HP@208V, 100-125 HP@460V & 100-125 HP@575V	Traditional	626	285	78.14 x 39.1 x 23.09	1985 x 993 x 587	55-217709
150-300 HP@460V & 150 HP@575V	Traditional	1503	683	94.48 x 49.0 x 26.09	2400 x 1245 x 663	55-217710

Outline Dimensions & Weights for Type 3R Enclosures

Enclosed Drive	Enclosure Type	Weight (lbs)	Weight (kgs)	H x W x D (in)	H x W x D (mm)	Drawing #
2-5 HP@208V, 2-10 HP@460V & 2-10 HP@575V	Traditional	252	114	42.24 x 26.86 x 16.73	1073 x 682 x 425	55-217711
7.5-20 HP@208V, 15-40 HP@460V & 15-40 HP@575V	Traditional	453	206	56.18 x 34.86 x 21.13	1427 x 885 x 537	55-217712
25-30 HP@208V, 50-75 HP@460V & 50-75 HP@575V	Traditional	610	277	64.21 x 41.1 x 24.68	1631 x 1044 x 627	55-217713
40-60 HP@208V, 100-125 HP@460V & 100-125 HP@575V	Traditional	768	349	78.14 x 46.01 x 25.97	1985 x 1169 x 660	55-217752
150 HP@460V & 150 HP@575V	Traditional	1227	557	94.48 x 56.89 x 28.7	2400 x 1445 x 729	55-217753

AF-600FP™ Enclosed Drive Panels
Dimensional Drawings

Outline Dimensions & Weights for Redundant Drive Type 1 Enclosures

Enclosed Drive	Enclosure Type	Weight (lbs)	Weight (kgs)	H x W x D (in)	H x W x D (mm)	Drawing #
15-25HP@460V	Slimline	224	102	61.72 x 17.10 x 15.91	1567.7 x 434.2 x 404.0	55-217844
30-50HP@460V	Slimline	352	160	69.54 x 24.00 x 17.91	1766.3 x 609.6 x 454.8	55-217845
15-25HP@460V	Traditional	320	145	56.18 x 30.73 x 18.53	1427.0 x 780.6 x 470.8	55-217779
30-50HP@460V	Traditional	481	218	64.18 x 35.47 x 22.12	1630.2 x 901.0 x 561.8	55-217780
60-75HP@460V	Traditional	758	344	74.02 x 38.66 x 22.93	1880.1 x 981.9 x 582.4	55-217781
100-125HP@460V	Traditional	1211	550	94.48 x 48.00 x 25.83	2399.8 x 1219.2 x 656.0	55-217782

Outline Dimensions & Weights for Disconnect Drive Type 1 Enclosures

Enclosed Drive	Enclosure Type	Weight (lbs)	Weight (kgs)	H x W x D (in)	H x W x D (mm)	Drawing #
1-25HP@460V	Slimline	120	54	31.14 x 15.15 x 14.99	791.0 x 384.8 x 380.8	270A8160
30-75HP@460V	Slimline	245	111	47.94 x 19.95 x 18.04	1217.7 x 506.7 x 458.1	270A8162
100-125HP@460V	Slimline	345	157	60.22 x 25.91 x 19.51	1529.6 x 658.1 x 495.6	270A8163
150-200HP@460V	Traditional	707	321	64.50 x 35.96 x 23.26	1638.3 x 913.4 x 590.8	270A8164
250-350HP@460V	Traditional	927	421	77.26 x 38.49 x 23.29	1962.4 x 977.7 x 591.4	270A8165
450-600HP@460V	Traditional	1575	715	87.55 x 54.00 x 26.88	2223.6 x 1371.6 x 682.8	270A8166

Elementary and Connection Wiring Diagrams

Disconnect Drive	55-537954
Non-Bypass	55-537777
2 Contactor Bypass	55-537776
3 Contactor Bypass	55-537775
Redundant Drive Bypass	55-686669

Visit http://www.geindustrial.com/drives for additional product information including programming guides, drawings, programming software, an energy savings calculator, and much more.

AF-650GP™ Enclosed Drive Panels

Product Description

Combining all the features of the AF-650 GP™ General Purpose/ Constant Torque core drive with line and load filters, contactor and control schemes and functionality like dynamic braking and closed loop speed control, the AF-650 GP Enclosed Drive Panel can service the tougher industrial and commercial drive needs.

With Type 1, 12 and 3R enclosures, and with power ratings up to 300HP, the AF-650 GP™ Panel has the ratings to meet most needs. Ratings include:

—A compact design to minimize cost and space, the Disconnect Drive panel is available in NEMA Type 1 enclosures with power ratings up to 50HP @ 208V, 550HP @ 460V, and 600HP @ 575V.

—208Vac, 460Vac and 575Vac offerings
—Up to 300HP available in standard offering
—Up to 500HP available as factory quote
—Up to 600HP in Disconnect Drive
—Up to 1000HP MultiPulse panels (e.g., 12, 18 or 24 pulse) available as factory quote

—Slimline NEMA Type 1 enclosure (standard on lower HP units)
—Traditional NEMA Type 1 enclosure (standard on higher HP units)
—Traditional NEMA Type 12 enclosure
—Traditional NEMA 3R enclosure

—Disconnect Drive with compact size
—Non-bypass with full feature set
—Drive +2 contactor bypass with full feature set
—Drive +3 contactor bypass with full feature set

With slimline designs and the ability to mount in "C" channels, the AF-650 GP Panel not only provides performance, reliability, and a variety of options, but it saves on space and can reduce installation time in tight spaces.

Visit http://www.geindustrial.com/drives for additional product information including programming guides, drawings, programming software, an energy savings calculator, and much more.

Drive Panels Product Numbering System Diagram

(Product number for illustrative purposes only)

Description: 6K GP X X NNN N X X N/X N/X N/X

GE Product Code

Drive Type
- GP = AF-650 GP

Input Voltage
- C = 208V
- H = 460V
- N = 575V

Configuration
- L = Disconnect Drive
- D = Non-Bypass
- 1 = Non-Bypass with Output Contactor
- 2 = 2 Contactor Bypass
- 3 = 3 Contactor Bypass

HP Rating
- 001 = 1 HP
- 010 = 10 HP
- 300 = 300 HP

Enclosure Type

1 = Type 1	G = NEMA 1 with Conformal Coating
2 = Type 12	D = NEMA 12 with Conformal Coating
6 = Type 3R	R = NEMA 3R with Conformal Coating

Reactor/Power

R = Standard Reactor, eqv. 3% Line Impedance	
C = 3% Load Reactor	
D = Dynamic Brake Chopper	
F = 5% AC Line Impedance	
H = Motor Space Heater & Extra VA CPT	
M = Matrix Harmonic Filter	
U = 1% Load Reactor	
V = 4.5% Line Impedance	
A = D + H	G = H + M
B = D + M	J = C + H
E = F + H	
1 = C + D + F	6 = C + D + F + H
2 = C + F	7 = D + F + H
3 = C + D + H	8 = D + F
4 = C + D	9 = D + H + M
5 = C + F + H	

Disconnect/Circuit Breaker
- D = Disconnect, Fused (100k AIC)
- C = Circuit Breaker, Mag Break (65k AIC)

Operator Devices

X = None (includes HOA)	
E = ETM	
F = Forward/Reverse Selector	
K = Door Mounted Keypad and USB Port	
L = Drive Run & Fault Pilot Lights	
P = Speed Pot	
S = Start/Stop Operators	
A = L + S	H = F + L + P
B = P + S	K = L + P + S
C = F + P	M = E + F + P
D = E + F + L	N = E + P + S
G = E + L + S	
1 = E + L	6 = E + F
2 = E + P	7 = E + L + P + S
3 = L + P	8 = E + S
4 = E + L + P	9 = F + L
5 = E + F + L + P	

Control Options

X = None (Default)	
E = Encoder Module	
M = Additional Input and Output	
R = Loss of Reference Control, Run @ Preset Speed	
S = Resolver Module	
Y = Relay Output Module	
3 = E + R	6 = S + R
4 = Y + R	8 = M + R

Communication Options
- X = Standard (Modbus RTU)
- D = DeviceNet
- E = EtherNet IP
- M = ModBus TCP
- N = ProfiNet RT
- P = ProfiBus DP

AF-650GP™ Enclosed Drive Panels
Enclosed Disconnect Drive Non-Bypass Pricing

As standard, all Enclosed Disconnect Drives include a fusible disconnect switch and fuses, an A2 rated EMI filter, Modbus RTU communication protocol, and the equivalent of 3% line reactor.

208 Vac, 3-Phase, 60Hz Input Power

Constant Torque HP Rating	AF-650 GP Panel Product No.	List Price GO-5GPP	List Price Adders, GO-5GPP							
			Conformal Coating	Circuit Breaker	6% AC Line Impedance[1]	4.5% AC Line Impedance[1]	3% Load Reactor	1% Load Reactor	Door Mounted Keypad	Communications & Option Boards
1	6KGPCL0011RDXXX	$2250.00	$210.00	$636.00	$469.00	$400.00	$603.00	N/A	N/A	All communication and option boards are field installable. Please select from core product.
2	6KGPCL0021RDXXX	$2400.00	$210.00	$636.00	$469.00	$400.00	$603.00	N/A	N/A	
3	6KGPCL0031RDXXX	$2890.00	$210.00	$636.00	$593.00	$510.00	$610.00	N/A	N/A	
5	6KGPCL0051RDXXX	$3530.00	$210.00	$636.00	$684.00	$585.00	$813.00	N/A	N/A	
7.5	6KGPCL0071RDXXX	$3985.00	$210.00	$636.00	$717.00	$610.00	$880.00	N/A	N/A	
10	6KGPCL0101RDXXX	$4825.00	$210.00	$636.00	$905.00	$775.00	$917.00	N/A	N/A	
15	6KGPCL0151RDXXX	$5710.00	$210.00	$755.00	$999.00	$850.00	$945.00	N/A	N/A	
20	6KGPCL0201RDXXX	$7130.00	$210.00	$766.00	$1170.00	$995.00	$1333.00	N/A	N/A	
25	6KGPCL0251RDXXX	$10295.00	$210.00	$766.00	$1170.00	$995.00	$1333.00	N/A	N/A	
30	6KGPCL0301RDXXX	$12560.00	$210.00	$1590.00	$1243.00	$1060.00	$1567.00	N/A	N/A	
40	6KGPCL0401RDXXX	$14075.00	$210.00	$1845.00	$1418.00	$1210.00	$2213.00	N/A	N/A	
50	6KGPCL0501RDXXX	$17830.00	$210.00	$1845.00	$1506.00	$1280.00	$2399.00	N/A	N/A	

460 Vac, 3-Phase, 60Hz Input Power

Constant Torque HP Rating	AF-650 GP Panel Product No.	List Price GO-5GPP	List Price Adders, GO-5GPP							
			Conformal Coating	Circuit Breaker	6% AC Line Impedance[1]	4.5% AC Line Impedance[1]	3% Load Reactor	1% Load Reactor	Door Mounted Keypad	Communications & Option Boards
1	6KGPHL0011RDXXX	$2350.00	$210.00	$636.00	$530.00	$455.00	$570.00	$485.00	N/A	All communication and option boards are field installable. Please select from core product.
2	6KGPHL0021RDXXX	$2635.00	$210.00	$636.00	$530.00	$455.00	$570.00	$485.00	N/A	
3	6KGPHL0031RDXXX	$2910.00	$210.00	$636.00	$553.00	$470.00	$580.00	$495.00	N/A	
5	6KGPHL0051RDXXX	$3165.00	$210.00	$636.00	$620.00	$530.00	$603.00	$515.00	N/A	
7.5	6KGPHL0071RDXXX	$3615.00	$210.00	$636.00	$778.00	$665.00	$610.00	$520.00	N/A	
10	6KGPHL0101RDXXX	$4085.00	$210.00	$636.00	$808.00	$690.00	$813.00	$700.00	N/A	
15	6KGPHL0151RDXXX	$4640.00	$210.00	$636.00	$1069.00	$910.00	$880.00	$750.00	N/A	
20	6KGPHL0201RDXXX	$5230.00	$210.00	$636.00	$1069.00	$910.00	$880.00	$750.00	N/A	
25	6KGPHL0251RDXXX	$6290.00	$210.00	$636.00	$1214.00	$1035.00	$917.00	$780.00	N/A	
30	6KGPHL0301RDXXX	$8520.00	$210.00	$755.00	$1214.00	$1035.00	$945.00	$810.00	N/A	
40	6KGPHL0401RDXXX	$9520.00	$210.00	$766.00	$1266.00	$1080.00	$1333.00	$1135.00	N/A	
50	6KGPHL0501RDXXX	$10850.00	$210.00	$766.00	$1266.00	$1080.00	$1333.00	$1135.00	N/A	
60	6KGPHL0601RDXXX	$12550.00	$210.00	$1590.00	$1320.00	$1125.00	$1567.00	$1335.00	N/A	
75	6KGPHL0751RDXXX	$16750.00	$210.00	$1845.00	$1530.00	$1310.00	$2213.00	$1885.00	N/A	
100	6KGPHL1001RDXXX	$19900.00	$210.00	$1845.00	$1620.00	$1380.00	$2399.00	$2040.00	N/A	
125	6KGPHL1251RDXXX	$25340.00	$210.00	$1845.00	$1691.00	$1440.00	$2511.00	$2135.00	N/A	
150	6KGPHL1501RDXXX	$28910.00	$705.00	$2575.00	$1850.00	$1575.00	$2570.00	$2185.00	$600.00	
200	6KGPHL2001RDXXX	$34850.00	$705.00	$2575.00	$1954.00	$1665.00	$2761.00	$2350.00	$600.00	
250	6KGPHL2501RDXXX	$41155.00	$705.00	$4191.00	$1954.00	$1665.00	$3104.00	$2640.00	$600.00	
300	6KGPHL3001RDXXX	$45160.00	$705.00	$5867.00	$2188.00	$1860.00	$3280.00	$2800.00	$600.00	
350	6KGPHL350GRDXXX	$57000.00	Std	$6845.00	$3000.00	$2550.00	$3565.00	$3026.00	$600.00	
450	6KGPHL450GRDXXX	$70000.00	Std	$8800.00	$3800.00	$3230.00	$4510.00	$3833.00	$600.00	
500	6KGPHL500GRDXXX	$80000.00	Std	$9780.00	$4200.00	$3570.00	$4985.00	$4237.00	$600.00	
550	6KGPHL550GRDXXX	$89000.00	Std	$10760.00	$4600.00	$3910.00	$5460.00	$4640.00	$600.00	

[1]Drive comes standard with 3% line impedance via DC Link Reactor.

AF-650GP™ Enclosed Drive Panels
Enclosed Disconnect Drive Non-Bypass Pricing

575 Vac, 3-Phase, 60Hz Input Power

Constant Torque HP Rating	AF-650 GP Panel Product No.	List Price GO-5GPP	List Price Adders, GO-5GPP							
			Conformal Coating	Circuit Breaker	6% AC Line Impedance[1]	4.5% AC Line Impedance[1]	3% Load Reactor	1% Load Reactor	Door Mounted Keypad	Communications & Option Boards
1	6KGPNL0011RDXXX	$3130.00	$210.00	$636.00	$530.00	$455.00	$570.00	$485.00	N/A	All communication and option boards are field installable. Please select from core product.
2	6KGPNL0021RDXXX	$3475.00	$210.00	$636.00	$530.00	$455.00	$570.00	$485.00	N/A	
3	6KGPNL0031RDXXX	$3825.00	$210.00	$636.00	$553.00	$470.00	$580.00	$495.00	N/A	
5	6KGPNL0051RDXXX	$4160.00	$210.00	$636.00	$620.00	$530.00	$603.00	$515.00	N/A	
7.5	6KGPNL0071RDXXX	$4740.00	$210.00	$636.00	$778.00	$665.00	$610.00	$520.00	N/A	
10	6KGPNL0101RDXXX	$5350.00	$210.00	$636.00	$808.00	$690.00	$813.00	$700.00	N/A	
15	6KGPNL0151RDXXX	$6090.00	$210.00	$636.00	$1069.00	$910.00	$880.00	$750.00	N/A	
20	6KGPNL0201RDXXX	$6855.00	$210.00	$636.00	$1069.00	$910.00	$880.00	$750.00	N/A	
25	6KGPNL0251RDXXX	$8240.00	$210.00	$636.00	$1214.00	$1035.00	$917.00	$780.00	N/A	
30	6KGPNL0301RDXXX	$11135.00	$210.00	$755.00	$1214.00	$1035.00	$945.00	$810.00	N/A	
40	6KGPNL0401RDXXX	$12440.00	$210.00	$766.00	$1266.00	$1080.00	$1333.00	$1135.00	N/A	
50	6KGPNL0501RDXXX	$14200.00	$210.00	$766.00	$1266.00	$1080.00	$1333.00	$1135.00	N/A	
60	6KGPNL0601RDXXX	$16410.00	$210.00	$1590.00	$1320.00	$1125.00	$1567.00	$1335.00	N/A	
75	6KGPNL0751RDXXX	$21865.00	$210.00	$1845.00	$1530.00	$1310.00	$2213.00	$1885.00	N/A	
100	6KGPNL1001RDXXX	$26020.00	$210.00	$1845.00	$1620.00	$1380.00	$2399.00	$2040.00	N/A	
125	6KGPNL125GRDXXX	$34380.00	Std	$1845.00	$1691.00	$1440.00	$2511.00	$2135.00	N/A	
150	6KGPNL150GRDXXX	$39970.00	Std	$2575.00	$1850.00	$1575.00	$2570.00	$2185.00	$600.00	
200	6KGPNL200GRDXXX	$47985.00	Std	$2575.00	$1954.00	$1665.00	$2761.00	$2350.00	$600.00	
250	6KGPNL250GRDXXX	$56500.00	Std	$4191.00	$1954.00	$1665.00	$3104.00	$2640.00	$600.00	
300	6KGPNL300GRDXXX	$61910.00	Std	$5867.00	$2188.00	$1860.00	$3280.00	$2800.00	$600.00	
350	6KGPNL350GRDXXX	$76950.00	Std	$6845.00	$3000.00	$2550.00	$3565.00	$3026.00	$600.00	
400	6KGPNL400GRDXXX	$94500.00	Std	$8800.00	$3800.00	$3230.00	$4510.00	$3833.00	$600.00	
500	6KGPNL500GRDXXX	$120150.00	Std	$10760.00	$4600.00	$3910.00	$5460.00	$4640.00	$600.00	
600	6KGPNL600GRDXXX	$132000.00	Std	$11725.00	$5000.00	$4250.00	$5935.00	$5050.00	$600.00	

[1]Drive comes standard with 3% line impedance via DC Link Reactor.

AF-650GP™ Enclosed Drive Panels
Enclosed Non-Bypass Drive Pricing

As standard, all Enclosed Non-Bypass Drives include a fusible disconnect switch and fuses, a door- mounted keypad, an HOA operator, an E-Stop button (for UL508A compliance), power on and enable lights, a customer terminal board for control connection, an A2 rated EMI filter, Modbus RTU communication protocols, and the equivalent of 3% line reactor.

208 Vac, 3-Phase, 60Hz Input Power

Constant Torque HP Rating	AF-650 GP Panel Product No.	Max. Cont. Current	List Price GO-5GPP	List Price Adders, GO-5GPP								
				NEMA 12 Enclosure	NEMA 3R Enclosure	Conformal Coating	6% AC Line Impedance[1]	3% Load Reactor	Circuit Breaker	Dynamic Brake[2]	Matrix Harmonic Filter[3]	Motor Space Heater & Extra VA CPT[4]
1	6KGPCD0011RDXXX	4.6	$2401.00	$570.00	$1000.00	$210.00	$469.00	$603.00	$636.00	$125.00	$2100.00	$400.00
2	6KGPCD0021RDXXX	7.5	$2547.00	$570.00	$1000.00	$210.00	$469.00	$603.00	$636.00	$140.00	$2175.00	$400.00
3	6KGPCD0031RDXXX	10.6	$3038.00	$570.00	$1000.00	$210.00	$593.00	$610.00	$636.00	$165.00	$2450.00	$400.00
5	6KGPCD0051RDXXX	16.7	$3678.00	$590.00	$1500.00	$210.00	$684.00	$813.00	$636.00	$200.00	$2500.00	$400.00
7.5	6KGPCD0071RDXXX	24.2	$4181.00	$590.00	$1500.00	$210.00	$717.00	$880.00	$636.00	$230.00	$2875.00	$400.00
10	6KGPCD0101RDXXX	30.8	$5024.00	$590.00	$1750.00	$210.00	$905.00	$917.00	$636.00	$260.00	$3075.00	$400.00
15	6KGPCD0151RDXXX	46.2	$5905.00	$740.00	$1750.00	$210.00	$999.00	$945.00	$755.00	$335.00	$3875.00	$400.00
20	6KGPCD0201RDXXX	59.4	$7329.00	$740.00	$2000.00	$210.00	$1170.00	$1333.00	$766.00	$410.00	$4800.00	$400.00
25	6KGPCD0251RDXXX	74.8	$10592.00	$740.00	$2000.00	$210.00	$1170.00	$1333.00	$766.00	$460.00	$5575.00	$400.00
30	6KGPCD0301RDXXX	88	$12857.00	$1180.00	$2500.00	$210.00	$1243.00	$1567.00	$1590.00	$580.00	$6700.00	$400.00
40	6KGPCD0401RDXXX	115	$14571.00	$1370.00	$3500.00	$210.00	$1418.00	$2213.00	$1845.00	$720.00	$9043.00	$400.00
50	6KGPCD0501RDXXX	143	$18329.00	$1670.00	$3500.00	$210.00	$1506.00	$2399.00	$1845.00	$875.00	$9981.00	$400.00

460 Vac, 3-Phase, 60Hz Input Power

Constant Torque HP Rating	AF-650 GP Panel Product No.	Max. Cont. Current	List Price GO-5GPP	List Price Adders, GO-5GPP								
				NEMA 12 Enclosure	NEMA 3R Enclosure	Conformal Coating	6% AC Line Impedance[1]	3% Load Reactor	Circuit Breaker	Dynamic Brake[2]	Matrix Harmonic Filter[3]	Motor Space Heater & Extra VA CPT[4]
1	6KGPHD0011RDXXX	2.1	$2501.00	$570.00	$1000.00	$210.00	$530.00	$570.00	$636.00	$125.00	$2100.00	$400.00
2	6KGPHD0021RDXXX	3.4	$2785.00	$570.00	$1000.00	$210.00	$530.00	$570.00	$636.00	$150.00	$2100.00	$400.00
3	6KGPHD0031RDXXX	4.8	$3056.00	$570.00	$1000.00	$210.00	$553.00	$580.00	$636.00	$175.00	$2100.00	$400.00
5	6KGPHD0051RDXXX	8.2	$3314.00	$570.00	$1250.00	$210.00	$620.00	$603.00	$636.00	$200.00	$2175.00	$400.00
7.5	6KGPHD0071RDXXX	11	$3762.00	$570.00	$1250.00	$210.00	$778.00	$610.00	$636.00	$230.00	$2450.00	$400.00
10	6KGPHD0101RDXXX	14.5	$4231.00	$570.00	$1500.00	$210.00	$808.00	$813.00	$636.00	$260.00	$2500.00	$400.00
15	6KGPHD0151RDXXX	21	$4839.00	$590.00	$1500.00	$210.00	$1069.00	$880.00	$636.00	$335.00	$2875.00	$400.00
20	6KGPHD0201RDXXX	27	$5427.00	$590.00	$1750.00	$210.00	$1069.00	$880.00	$636.00	$410.00	$3075.00	$400.00
25	6KGPHD0251RDXXX	34	$6491.00	$590.00	$1750.00	$210.00	$1214.00	$917.00	$636.00	$460.00	$3600.00	$400.00
30	6KGPHD0301RDXXX	40	$8719.00	$740.00	$1750.00	$210.00	$1214.00	$945.00	$755.00	$510.00	$3875.00	$400.00
40	6KGPHD0401RDXXX	52	$9721.00	$740.00	$2000.00	$210.00	$1266.00	$1333.00	$766.00	$630.00	$4800.00	$400.00
50	6KGPHD0501RDXXX	65	$11152.00	$740.00	$2000.00	$210.00	$1266.00	$1333.00	$766.00	$770.00	$5575.00	$400.00
60	6KGPHD0601RDXXX	80	$12850.00	$890.00	$2500.00	$210.00	$1320.00	$1567.00	$1590.00	$910.00	$6300.00	$400.00
75	6KGPHD0751RDXXX	105	$17048.00	$1370.00	$3500.00	$210.00	$1530.00	$2213.00	$1845.00	$1030.00	$6700.00	$400.00
100	6KGPHD1001RDXXX	130	$20395.00	$1630.00	$3500.00	$210.00	$1620.00	$2399.00	$1845.00	$1170.00	$9043.00	$400.00
125	6KGPHD1251RDXXX	160	$25836.00	$2020.00	$3500.00	$705.00	$1691.00	$2511.00	$1845.00	$1325.00	N/A	$400.00
150	6KGPHD1501RDXXX	190	$29607.00	$2370.00	$4000.00	$705.00	$1850.00	$2570.00	$2575.00	$1625.00	N/A	$400.00
200	6KGPHD2001RDXXX	240	$35542.00	$2840.00	N/A	$705.00	$1954.00	$2761.00	$2575.00	$1900.00	N/A	$400.00
250	6KGPHD2501RDXXX	302	$41855.00	$3500.00	N/A	$705.00	$1954.00	$3104.00	$4191.00	$2275.00	N/A	$400.00
300	6KGPHD3001RDXXX	361	$45856.00	$4125.00	N/A	$705.00	$2188.00	$3082.00	$5867.00	$2955.00	N/A	$400.00

575 Vac, 3-Phase, 60Hz Input Power

Constant Torque HP Rating	AF-650 GP Panel Product No.	Max. Cont. Current	List Price GO-5GPP	List Price Adders, GO-5GPP								
				NEMA 12 Enclosure	NEMA 3R Enclosure	Conformal Coating	6% AC Line Impedance[1]	3% Load Reactor	Circuit Breaker	Dynamic Brake[2]	Matrix Harmonic Filter[3]	Motor Space Heater & Extra VA CPT[4]
1	6KGPND0011RDXXX	1.7	$3280.00	$570.00	$1000.00	$210.00	$530.00	$570.00	$636.00	$125.00	N/A	$400.00
2	6KGPND0021RDXXX	2.7	$3623.00	$570.00	$1000.00	$210.00	$530.00	$570.00	$636.00	$150.00	N/A	$400.00
3	6KGPND0031RDXXX	3.9	$3972.00	$570.00	$1000.00	$210.00	$553.00	$580.00	$636.00	$175.00	N/A	$400.00
5	6KGPND0051RDXXX	6.1	$4307.00	$570.00	$1250.00	$210.00	$620.00	$603.00	$636.00	$200.00	N/A	$400.00
7.5	6KGPND0071RDXXX	9	$4890.00	$570.00	$1250.00	$210.00	$778.00	$610.00	$636.00	$230.00	N/A	$400.00
10	6KGPND0101RDXXX	11	$5500.00	$570.00	$1500.00	$210.00	$808.00	$813.00	$636.00	$260.00	N/A	$400.00
15	6KGPND0151RDXXX	18	$6291.00	$590.00	$1500.00	$210.00	$1069.00	$880.00	$636.00	$335.00	N/A	$400.00
20	6KGPND0201RDXXX	22	$7055.00	$590.00	$1750.00	$210.00	$1069.00	$880.00	$636.00	$410.00	N/A	$400.00
25	6KGPND0251RDXXX	27	$8438.00	$590.00	$1750.00	$210.00	$1214.00	$917.00	$636.00	$460.00	N/A	$400.00
30	6KGPND0301RDXXX	34	$11334.00	$740.00	$1750.00	$210.00	$1214.00	$945.00	$755.00	$510.00	N/A	$400.00
40	6KGPND0401RDXXX	41	$12639.00	$740.00	$2000.00	$210.00	$1266.00	$1333.00	$766.00	$630.00	N/A	$400.00
50	6KGPND0501RDXXX	52	$14497.00	$740.00	$2000.00	$210.00	$1266.00	$1333.00	$766.00	$770.00	N/A	$400.00
60	6KGPND0601RDXXX	62	$16704.00	$890.00	$2500.00	$210.00	$1320.00	$1567.00	$1590.00	$910.00	N/A	$400.00
75	6KGPND0751RDXXX	83	$22162.00	$1780.00	$3500.00	$210.00	$1530.00	$2213.00	$1845.00	$1030.00	N/A	$400.00
100	6KGPND1001RDXXX	100	$26513.00	$2115.00	$3500.00	$210.00	$1620.00	$2399.00	$1845.00	$1170.00	N/A	$400.00

[1]Drive comes standard with 3% line impedance via DC Link Reactor.
[2]Includes DB Chopper rated for 10% duty cycle. DB resistors must be ordered separately.
[3]Matrix filter is only available in NEMA 1 enclosures and is not available with Line or Load reactors.
[4]This option provides a CPT with a minimal 150vA additional power.

AF-650GP™ Enclosed Drive Panels
Enclosed Non-Bypass Drive with Output Contactor Pricing

As standard, all Enclosed Non-Bypass Drives with an Output Contactor include a fusible disconnect switch and fuses, a door-mounted keypad, an HOA operator, an E-Stop button (for UL508A compliance), power on and enable lights, a customer terminal board for control connection, an A2 rated EMI filter, Modbus RTU communication protocols, and the equivalent of 3% line reactor, and a drive output contactor.

208 Vac, 3-Phase, 60Hz Input Power

Constant Torque HP Rating	AF-650 GP Panel Product No.	Max. Cont. Current	List Price GO-5GPP	List Price Adders, GO-5GPP								
				NEMA 12 Enclosure	NEMA 3R Enclosure	Conformal Coating	6% AC Line Impedance[1]	3% Load Reactor	Circuit Breaker	Dynamic Brake[2]	Matrix Harmonic Filter[3]	Motor Space Heater & Extra VA CPT[4]
1	6KGPC10011RDXXX	4.6	$2419.00	$570.00	$1000.00	$210.00	$469.00	$603.00	$636.00	$125.00	$2100.00	$400.00
2	6KGPC10021RDXXX	7.5	$2566.00	$570.00	$1000.00	$210.00	$469.00	$603.00	$636.00	$140.00	$2175.00	$400.00
3	6KGPC10031RDXXX	10.6	$3061.00	$570.00	$1000.00	$210.00	$593.00	$610.00	$636.00	$165.00	$2450.00	$400.00
5	6KGPC10051RDXXX	16.7	$3705.00	$590.00	$1500.00	$210.00	$684.00	$813.00	$636.00	$200.00	$2500.00	$400.00
7.5	6KGPC10071RDXXX	24.2	$4213.00	$590.00	$1500.00	$210.00	$717.00	$880.00	$636.00	$230.00	$2875.00	$400.00
10	6KGPC10101RDXXX	30.8	$5062.00	$590.00	$1750.00	$210.00	$905.00	$917.00	$636.00	$260.00	$3075.00	$400.00
15	6KGPC10151RDXXX	46.2	$5950.00	$740.00	$1750.00	$210.00	$999.00	$945.00	$755.00	$335.00	$3875.00	$400.00
20	6KGPC10201RDXXX	59.4	$7384.00	$740.00	$2000.00	$210.00	$1170.00	$1333.00	$766.00	$410.00	$4800.00	$400.00
25	6KGPC10251RDXXX	74.8	$10671.00	$740.00	$2000.00	$210.00	$1170.00	$1333.00	$766.00	$460.00	$5575.00	$400.00
30	6KGPC10301RDXXX	88	$12953.00	$1180.00	$2500.00	$210.00	$1243.00	$1567.00	$1590.00	$580.00	$6700.00	$400.00
40	6KGPC10401RDXXX	115	$14680.00	$1370.00	$3500.00	$210.00	$1418.00	$2213.00	$1845.00	$720.00	$9043.00	$400.00
50	6KGPC10501RDXXX	143	$18466.00	$1670.00	$3500.00	$210.00	$1506.00	$2399.00	$1845.00	$875.00	$9981.00	$400.00

460 Vac, 3-Phase, 60Hz Input Power

Constant Torque HP Rating	AF-650 GP Panel Product No.	Max. Cont. Current	List Price GO-5GPP	List Price Adders, GO-5GPP								
				NEMA 12 Enclosure	NEMA 3R Enclosure	Conformal Coating	6% AC Line Impedance[1]	3% Load Reactor	Circuit Breaker	Dynamic Brake[2]	Matrix Harmonic Filter[3]	Motor Space Heater & Extra VA CPT[4]
1	6KGPH10011RDXXX	2.1	$2520.00	$570.00	$1000.00	$210.00	$530.00	$570.00	$636.00	$125.00	$2100.00	$400.00
2	6KGPH10021RDXXX	3.4	$2806.00	$570.00	$1000.00	$210.00	$530.00	$570.00	$636.00	$150.00	$2100.00	$400.00
3	6KGPH10031RDXXX	4.8	$3078.00	$570.00	$1000.00	$210.00	$553.00	$580.00	$636.00	$175.00	$2100.00	$400.00
5	6KGPH10051RDXXX	8.2	$3339.00	$570.00	$1250.00	$210.00	$620.00	$603.00	$636.00	$200.00	$2175.00	$400.00
7.5	6KGPH10071RDXXX	11	$3790.00	$570.00	$1250.00	$210.00	$778.00	$610.00	$636.00	$230.00	$2450.00	$400.00
10	6KGPH10101RDXXX	14.5	$4263.00	$570.00	$1500.00	$210.00	$808.00	$813.00	$636.00	$260.00	$2500.00	$400.00
15	6KGPH10151RDXXX	21	$4875.00	$590.00	$1500.00	$210.00	$1069.00	$880.00	$636.00	$335.00	$2875.00	$400.00
20	6KGPH10201RDXXX	27	$5468.00	$590.00	$1750.00	$210.00	$1069.00	$880.00	$636.00	$410.00	$3075.00	$400.00
25	6KGPH10251RDXXX	34	$6539.00	$590.00	$1750.00	$210.00	$1214.00	$917.00	$636.00	$460.00	$3600.00	$400.00
30	6KGPH10301RDXXX	40	$8785.00	$740.00	$1750.00	$210.00	$1214.00	$945.00	$755.00	$510.00	$3875.00	$400.00
40	6KGPH10401RDXXX	52	$9794.00	$740.00	$2000.00	$210.00	$1266.00	$1333.00	$766.00	$630.00	$4800.00	$400.00
50	6KGPH10501RDXXX	65	$11235.00	$740.00	$2000.00	$210.00	$1266.00	$1333.00	$766.00	$770.00	$5575.00	$400.00
60	6KGPH10601RDXXX	80	$12946.00	$890.00	$2500.00	$210.00	$1320.00	$1567.00	$1590.00	$910.00	$6300.00	$400.00
75	6KGPH10751RDXXX	105	$17175.00	$1370.00	$3500.00	$210.00	$1530.00	$2213.00	$1845.00	$1030.00	$6700.00	$400.00
100	6KGPH11001RDXXX	130	$20548.00	$1630.00	$3500.00	$210.00	$1620.00	$2399.00	$1845.00	$1170.00	$9043.00	$400.00
125	6KGPH11251RDXXX	160	$26030.00	$2020.00	$3500.00	$705.00	$1691.00	$2511.00	$1845.00	$1325.00	N/A	$400.00
150	6KGPH11501RDXXX	190	$29829.00	$2370.00	$4000.00	$705.00	$1850.00	$2570.00	$2575.00	$1625.00	N/A	$400.00
200	6KGPH12001RDXXX	240	$35808.00	$2840.00	N/A	$705.00	$1954.00	$2761.00	$2575.00	$1900.00	N/A	$400.00
250	6KGPH12501RDXXX	302	$42169.00	$3500.00	N/A	$705.00	$1954.00	$3104.00	$4191.00	$2275.00	N/A	$400.00
300	6KGPH13001RDXXX	361	$46200.00	$4125.00	N/A	$705.00	$2188.00	$3082.00	$5867.00	$2955.00	N/A	$400.00

575 Vac, 3-Phase, 60Hz Input Power

Constant Torque HP Rating	AF-650 GP Panel Product No.	Max. Cont. Current	List Price GO-5GPP	List Price Adders, GO-5GPP								
				NEMA 12 Enclosure	NEMA 3R Enclosure	Conformal Coating	6% AC Line Impedance[1]	3% Load Reactor	Circuit Breaker	Dynamic Brake[2]	Matrix Harmonic Filter[3]	Motor Space Heater & Extra VA CPT[4]
1	6KGPN10011RDXXX	1.7	$3300.00	$570.00	$1000.00	$210.00	$530.00	$570.00	$636.00	$125.00	N/A	$400.00
2	6KGPN10021RDXXX	2.7	$3650.00	$570.00	$1000.00	$210.00	$530.00	$570.00	$636.00	$150.00	N/A	$400.00
3	6KGPN10031RDXXX	3.9	$4002.00	$570.00	$1000.00	$210.00	$553.00	$580.00	$636.00	$175.00	N/A	$400.00
5	6KGPN10051RDXXX	6.1	$4339.00	$570.00	$1250.00	$210.00	$620.00	$603.00	$636.00	$200.00	N/A	$400.00
7.5	6KGPN10071RDXXX	9	$4926.00	$570.00	$1250.00	$210.00	$778.00	$610.00	$636.00	$230.00	N/A	$400.00
10	6KGPN10101RDXXX	11	$5542.00	$570.00	$1500.00	$210.00	$808.00	$813.00	$636.00	$260.00	N/A	$400.00
15	6KGPN10151RDXXX	18	$6338.00	$590.00	$1500.00	$210.00	$1069.00	$880.00	$636.00	$335.00	N/A	$400.00
20	6KGPN10201RDXXX	22	$7108.00	$590.00	$1750.00	$210.00	$1069.00	$880.00	$636.00	$410.00	N/A	$400.00
25	6KGPN10251RDXXX	27	$8501.00	$590.00	$1750.00	$210.00	$1214.00	$917.00	$636.00	$460.00	N/A	$400.00
30	6KGPN10301RDXXX	34	$11419.00	$740.00	$1750.00	$210.00	$1214.00	$945.00	$755.00	$510.00	N/A	$400.00
40	6KGPN10401RDXXX	41	$12733.00	$740.00	$2000.00	$210.00	$1266.00	$1333.00	$766.00	$630.00	N/A	$400.00
50	6KGPN10501RDXXX	52	$14606.00	$740.00	$2000.00	$210.00	$1266.00	$1333.00	$766.00	$770.00	N/A	$400.00
60	6KGPN10601RDXXX	62	$16829.00	$890.00	$2500.00	$210.00	$1320.00	$1567.00	$1590.00	$910.00	N/A	$400.00
75	6KGPN10751RDXXX	83	$22328.00	$1780.00	$3500.00	$210.00	$1530.00	$2213.00	$1845.00	$1030.00	N/A	$400.00
100	6KGPN11001RDXXX	100	$26712.00	$2115.00	$3500.00	$210.00	$1620.00	$2399.00	$1845.00	$1170.00	N/A	$400.00

[1]Drive comes standard with 3% line impedance via DC Link Reactor.
[2]Includes DB Chopper rated for 10% duty cycle. DB resistors must be ordered separately.
[3]Matrix filter is only available in NEMA 1 enclosures and is not available with Line or Load reactors.
[4]This option provides a CPT with a minimal 150vA additional power.

AF-650GP™ Enclosed Drive Panels
Enclosed 2 Contactor Bypass Drives Pricing

As standard, all Enclosed 2 Contactor Bypass Drives include a fusible disconnect switch and fuses, a door-mounted keypad, an HOA operator, an E-Stop button (for UL508A compliance), a Drive/Off/Bypass switch, power on, enable, bypass and overload lights, a customer terminal board for control connection, an A2 rated EMI filter, Modbus RTU communication protocols, the equivalent of 3% line reactor, a drive output contactor interlocked with a FVNR bypass contactor, and Class 20/30 overloads.

208 Vac, 3-Phase, 60Hz Input Power

Constant Torque HP Rating	AF-650 GP Panel Product No.	Max. Cont. Current	List Price GO-5GPP	List Price Adders, GO-5GPP								
				NEMA 12 Enclosure	NEMA 3R Enclosure	Conformal Coating	6% AC Line Impedance[1]	3% Load Reactor	Circuit Breaker	Dynamic Brake[2]	Matrix Harmonic Filter[3]	Motor Space Heater & Extra VA CPT[4]
1	6KGPC20011RDXXX	4.6	$2473.00	$570.00	$1000.00	$210.00	$469.00	$603.00	$636.00	$125.00	$2100.00	$400.00
2	6KGPC20021RDXXX	7.5	$2751.00	$570.00	$1000.00	$210.00	$469.00	$603.00	$636.00	$140.00	$2175.00	$400.00
3	6KGPC20031RDXXX	10.6	$3258.00	$570.00	$1000.00	$210.00	$593.00	$610.00	$636.00	$165.00	$2450.00	$400.00
5	6KGPC20051RDXXX	16.7	$3974.00	$590.00	$1500.00	$210.00	$684.00	$813.00	$636.00	$200.00	$2500.00	$400.00
7.5	6KGPC20071RDXXX	24.2	$4755.00	$590.00	$1500.00	$210.00	$717.00	$880.00	$636.00	$230.00	$2875.00	$400.00
10	6KGPC20101RDXXX	30.8	$5603.00	$590.00	$1750.00	$210.00	$905.00	$917.00	$636.00	$260.00	$3075.00	$400.00
15	6KGPC20151RDXXX	46.2	$6696.00	$740.00	$1750.00	$210.00	$999.00	$945.00	$755.00	$335.00	$3875.00	$400.00
20	6KGPC20201RDXXX	59.4	$8310.00	$740.00	$2000.00	$210.00	$1170.00	$1333.00	$766.00	$410.00	$4800.00	$400.00
25	6KGPC20251RDXXX	74.8	$12486.00	$740.00	$2000.00	$210.00	$1170.00	$1333.00	$766.00	$460.00	$5575.00	$400.00
30	6KGPC20301RDXXX	88	$15638.00	$1180.00	$2500.00	$210.00	$1243.00	$1567.00	$1590.00	$580.00	$6700.00	$400.00
40	6KGPC20402RDXXX	115	$18455.00	$1370.00	$3500.00	$210.00	$1418.00	$2213.00	$1845.00	$720.00	$9043.00	$400.00
50	6KGPC20502RDXXX	143	$22570.00	$1670.00	$3500.00	$210.00	$1506.00	$2399.00	$1845.00	$875.00	$9981.00	$400.00

460 Vac, 3-Phase, 60Hz Input Power

Constant Torque HP Rating	AF-650 GP Panel Product No.	Max. Cont. Current	List Price GO-5GPP	List Price Adders, GO-5GPP								
				NEMA 12 Enclosure	NEMA 3R Enclosure	Conformal Coating	6% AC Line Impedance[1]	3% Load Reactor	Circuit Breaker	Dynamic Brake[2]	Matrix Harmonic Filter[3]	Motor Space Heater & Extra VA CPT[4]
1	6KGPH20011RDXXX	2.1	$2565.00	$570.00	$1000.00	$210.00	$530.00	$570.00	$636.00	$125.00	$2100.00	$400.00
2	6KGPH20021RDXXX	3.4	$2912.00	$570.00	$1000.00	$210.00	$530.00	$570.00	$636.00	$150.00	$2100.00	$400.00
3	6KGPH20031RDXXX	4.8	$3174.00	$570.00	$1000.00	$210.00	$553.00	$580.00	$636.00	$175.00	$2100.00	$400.00
5	6KGPH20051RDXXX	8.2	$3472.00	$570.00	$1250.00	$210.00	$620.00	$603.00	$636.00	$200.00	$2175.00	$400.00
7.5	6KGPH20071RDXXX	11	$3977.00	$570.00	$1250.00	$210.00	$778.00	$610.00	$636.00	$230.00	$2450.00	$400.00
10	6KGPH20101RDXXX	14.5	$4492.00	$570.00	$1500.00	$210.00	$808.00	$813.00	$636.00	$260.00	$2500.00	$400.00
15	6KGPH20151RDXXX	21	$5065.00	$590.00	$1500.00	$210.00	$1069.00	$880.00	$636.00	$335.00	$2875.00	$400.00
20	6KGPH20201RDXXX	27	$5857.00	$590.00	$1750.00	$210.00	$1069.00	$880.00	$636.00	$410.00	$3075.00	$400.00
25	6KGPH20251RDXXX	34	$7048.00	$590.00	$1750.00	$210.00	$1214.00	$917.00	$636.00	$460.00	$3600.00	$400.00
30	6KGPH20301RDXXX	40	$9248.00	$740.00	$1750.00	$210.00	$1214.00	$945.00	$755.00	$510.00	$3875.00	$400.00
40	6KGPH20401RDXXX	52	$10250.00	$740.00	$2000.00	$210.00	$1266.00	$1333.00	$766.00	$630.00	$4800.00	$400.00
50	6KGPH20501RDXXX	65	$11605.00	$740.00	$2000.00	$210.00	$1266.00	$1333.00	$766.00	$770.00	$5575.00	$400.00
60	6KGPH20601RDXXX	80	$13810.00	$890.00	$2500.00	$210.00	$1320.00	$1567.00	$1590.00	$910.00	$6300.00	$400.00
75	6KGPH20751RDXXX	105	$18636.00	$1370.00	$3500.00	$210.00	$1530.00	$2213.00	$1845.00	$1030.00	$6700.00	$400.00
100	6KGPH21002RDXXX	130	$22294.00	$1630.00	$3500.00	$210.00	$1620.00	$2399.00	$1845.00	$1170.00	$9043.00	$400.00
125	6KGPH21252RDXXX	160	$27632.00	$2020.00	$3500.00	$705.00	$1691.00	$2511.00	$1845.00	$1325.00	N/A	$400.00
150	6KGPH21502RDXXX	190	$32286.00	$2370.00	$4000.00	$705.00	$1850.00	$2570.00	$2575.00	$1625.00	N/A	$400.00
200	6KGPH22002RDXXX	240	$38940.00	$2840.00	N/A	$705.00	$1954.00	$2761.00	$2575.00	$1900.00	N/A	$400.00
250	6KGPH22502RDXXX	302	$47810.00	$3500.00	N/A	$705.00	$1954.00	$3104.00	$4191.00	$2275.00	N/A	$400.00
300	6KGPH23001RDXXX	361	$49019.00	$4125.00	N/A	$705.00	$2188.00	$3082.00	$5867.00	$2955.00	N/A	$400.00

575 Vac, 3-Phase, 60Hz Input Power

Constant Torque HP Rating	AF-650 GP Panel Product No.	Max. Cont. Current	List Price GO-5GPP	List Price Adders, GO-5GPP								
				NEMA 12 Enclosure	NEMA 3R Enclosure	Conformal Coating	6% AC Line Impedance[1]	3% Load Reactor	Circuit Breaker	Dynamic Brake[2]	Matrix Harmonic Filter[3]	Motor Space Heater & Extra VA CPT[4]
1	6KGPN20011RDXXX	1.7	$3440.00	$570.00	$1000.00	$210.00	$530.00	$570.00	$636.00	$125.00	N/A	$400.00
2	6KGPN20021RDXXX	2.7	$3785.00	$570.00	$1000.00	$210.00	$530.00	$570.00	$636.00	$150.00	N/A	$400.00
3	6KGPN20031RDXXX	3.9	$4126.00	$570.00	$1000.00	$210.00	$553.00	$580.00	$636.00	$175.00	N/A	$400.00
5	6KGPN20051RDXXX	6.1	$4514.00	$570.00	$1250.00	$210.00	$620.00	$603.00	$636.00	$200.00	N/A	$400.00
7.5	6KGPN20071RDXXX	9	$5169.00	$570.00	$1250.00	$210.00	$778.00	$610.00	$636.00	$230.00	N/A	$400.00
10	6KGPN20101RDXXX	11	$6173.00	$570.00	$1500.00	$210.00	$808.00	$813.00	$636.00	$260.00	N/A	$400.00
15	6KGPN20151RDXXX	18	$6738.00	$590.00	$1500.00	$210.00	$1069.00	$880.00	$636.00	$335.00	N/A	$400.00
20	6KGPN20201RDXXX	22	$7613.00	$590.00	$1750.00	$210.00	$1069.00	$880.00	$636.00	$410.00	N/A	$400.00
25	6KGPN20251RDXXX	27	$9163.00	$590.00	$1750.00	$210.00	$1214.00	$917.00	$636.00	$460.00	N/A	$400.00
30	6KGPN20301RDXXX	34	$12022.00	$740.00	$1750.00	$210.00	$1214.00	$945.00	$755.00	$510.00	N/A	$400.00
40	6KGPN20401RDXXX	41	$13325.00	$740.00	$2000.00	$210.00	$1266.00	$1333.00	$766.00	$630.00	N/A	$400.00
50	6KGPN20501RDXXX	52	$15086.00	$740.00	$2000.00	$210.00	$1266.00	$1333.00	$766.00	$770.00	N/A	$400.00
60	6KGPN20601RDXXX	62	$17954.00	$890.00	$2500.00	$210.00	$1320.00	$1567.00	$1590.00	$910.00	N/A	$400.00
75	6KGPN20751RDXXX	83	$24226.00	$1780.00	$3500.00	$210.00	$1530.00	$2213.00	$1845.00	$1030.00	N/A	$400.00
100	6KGPN21002RDXXX	100	$28981.00	$2115.00	$3500.00	$210.00	$1620.00	$2399.00	$1845.00	$1170.00	N/A	$400.00

[1]Drive comes standard with 3% line impedance via DC Link Reactor.
[2]Includes DB Chopper rated for 10% duty cycle. DB resistors must be ordered separately.
[3]Matrix filter is only available in NEMA 1 enclosures and is not available with Line or Load reactors.
[4]This option provides a CPT with a minimal 150vA additional power.

AF-650GP™ Enclosed Drive Panels
Enclosed 3 Contactor Bypass Drives Pricing

As standard, all Enclosed 3 Contactor Bypass Drives include a fusible disconnect switch and fuses, a door-mounted keypad, an HOA operator, an E-Stop button (for UL508A compliance), a Drive/Off/Bypass switch, a Test/Isolate/Normal switch power on, enable, bypass and overload lights, a customer terminal board for control connection, an A2 rated EMI filter, Modbus RTU communication protocols, the equivalent of 3% line reactor, a drive output contactor interlocked with a FVNR bypass contactor, a drive line isolation contactor, and Class 20/30 overloads.

208 Vac, 3-Phase, 60Hz Input Power

Constant Torque HP Rating	AF-650 GP Panel Product No.	Max. Cont. Current	List Price GO-5GPP	List Price Adders, GO-5GPP								
				NEMA 12 Enclosure	NEMA 3R Enclosure	Conformal Coating	6% AC Line Impedance[1]	3% Load Reactor	Circuit Breaker	Dynamic Brake[2]	Matrix Harmonic Filter[3]	Motor Space Heater & Extra VA CPT[4]
1	6KGPC30011RDXXX	4.6	$2697.00	$570.00	$1000.00	$210.00	$469.00	$603.00	$636.00	$125.00	$2100.00	$400.00
2	6KGPC30021RDXXX	7.5	$3061.00	$570.00	$1000.00	$210.00	$469.00	$603.00	$636.00	$140.00	$2175.00	$400.00
3	6KGPC30031RDXXX	10.6	$3603.00	$570.00	$1000.00	$210.00	$593.00	$610.00	$636.00	$165.00	$2450.00	$400.00
5	6KGPC30051RDXXX	16.7	$4315.00	$590.00	$1500.00	$210.00	$684.00	$813.00	$636.00	$200.00	$2500.00	$400.00
7.5	6KGPC30071RDXXX	24.2	$5277.00	$590.00	$1500.00	$210.00	$717.00	$880.00	$636.00	$230.00	$2875.00	$400.00
10	6KGPC30101RDXXX	30.8	$6149.00	$590.00	$1750.00	$210.00	$905.00	$917.00	$636.00	$260.00	$3075.00	$400.00
15	6KGPC30151RDXXX	46.2	$7259.00	$740.00	$1750.00	$210.00	$999.00	$945.00	$755.00	$335.00	$3875.00	$400.00
20	6KGPC30201RDXXX	59.4	$8942.00	$740.00	$2000.00	$210.00	$1170.00	$1333.00	$766.00	$410.00	$4800.00	$400.00
25	6KGPC30251RDXXX	74.8	$13584.00	$740.00	$2000.00	$210.00	$1170.00	$1333.00	$766.00	$460.00	$5575.00	$400.00
30	6KGPC30301RDXXX	88	$16989.00	$1180.00	$2500.00	$210.00	$1243.00	$1567.00	$1590.00	$580.00	$6700.00	$400.00
40	6KGPC30402RDXXX	115	$19709.00	$1370.00	$3500.00	$210.00	$1418.00	$2213.00	$1845.00	$720.00	$9043.00	$400.00
50	6KGPC30502RDXXX	143	$23933.00	$1670.00	$3500.00	$210.00	$1506.00	$2399.00	$1845.00	$875.00	$9981.00	$400.00

460 Vac, 3-Phase, 60Hz Input Power

Constant Torque HP Rating	AF-650 GP Panel Product No.	Max. Cont. Current	List Price GO-5GPP	List Price Adders, GO-5GPP								
				NEMA 12 Enclosure	NEMA 3R Enclosure	Conformal Coating	6% AC Line Impedance[1]	3% Load Reactor	Circuit Breaker	Dynamic Brake[2]	Matrix Harmonic Filter[3]	Motor Space Heater & Extra VA CPT[4]
1	6KGPH30011RDXXX	2.1	$2818.00	$570.00	$1000.00	$210.00	$530.00	$570.00	$636.00	$125.00	$2100.00	$400.00
2	6KGPH30021RDXXX	3.4	$3102.00	$570.00	$1000.00	$210.00	$530.00	$570.00	$636.00	$150.00	$2100.00	$400.00
3	6KGPH30031RDXXX	4.8	$3398.00	$570.00	$1000.00	$210.00	$553.00	$580.00	$636.00	$175.00	$2100.00	$400.00
5	6KGPH30051RDXXX	8.2	$3740.00	$570.00	$1250.00	$210.00	$620.00	$603.00	$636.00	$200.00	$2175.00	$400.00
7.5	6KGPH30071RDXXX	11	$4210.00	$570.00	$1250.00	$210.00	$778.00	$610.00	$636.00	$230.00	$2450.00	$400.00
10	6KGPH30101RDXXX	14.5	$4748.00	$570.00	$1500.00	$210.00	$808.00	$813.00	$636.00	$260.00	$2500.00	$400.00
15	6KGPH30151RDXXX	21	$5367.00	$590.00	$1500.00	$210.00	$1069.00	$880.00	$636.00	$335.00	$2875.00	$400.00
20	6KGPH30201RDXXX	27	$6202.00	$590.00	$1750.00	$210.00	$1069.00	$880.00	$636.00	$410.00	$3075.00	$400.00
25	6KGPH30251RDXXX	34	$7445.00	$590.00	$1750.00	$210.00	$1214.00	$917.00	$636.00	$460.00	$3600.00	$400.00
30	6KGPH30301RDXXX	40	$9778.00	$740.00	$1750.00	$210.00	$1214.00	$945.00	$755.00	$510.00	$3875.00	$400.00
40	6KGPH30401RDXXX	52	$10848.00	$740.00	$2000.00	$210.00	$1266.00	$1333.00	$766.00	$630.00	$4800.00	$400.00
50	6KGPH30501RDXXX	65	$12185.00	$740.00	$2000.00	$210.00	$1266.00	$1333.00	$766.00	$770.00	$5575.00	$400.00
60	6KGPH30601RDXXX	80	$14615.00	$890.00	$2500.00	$210.00	$1320.00	$1567.00	$1590.00	$910.00	$6300.00	$400.00
75	6KGPH30751RDXXX	105	$19671.00	$1370.00	$3500.00	$210.00	$1530.00	$2213.00	$1845.00	$1030.00	$6700.00	$400.00
100	6KGPH31002RDXXX	130	$23385.00	$1630.00	$3500.00	$210.00	$1620.00	$2399.00	$1845.00	$1170.00	$9043.00	$400.00
125	6KGPH31252RDXXX	160	$29038.00	$2020.00	$3500.00	$705.00	$1691.00	$2511.00	$1845.00	$1325.00	N/A	$400.00
150	6KGPH31502RDXXX	190	$34085.00	$2370.00	$4000.00	$705.00	$1850.00	$2570.00	$2575.00	$1625.00	N/A	$400.00
200	6KGPH32002RDXXX	240	$40855.00	$2840.00	N/A	$705.00	$1954.00	$2761.00	$2575.00	$1900.00	N/A	$400.00
250	6KGPH32502RDXXX	302	$50354.00	$3500.00	N/A	$705.00	$1954.00	$3104.00	$4191.00	$2275.00	N/A	$400.00
300	6KGPH33001RDXXX	361	$50600.00	$4125.00	N/A	$705.00	$2188.00	$3082.00	$5867.00	$2955.00	N/A	$400.00

575 Vac, 3-Phase, 60Hz Input Power

Constant Torque HP Rating	AF-650 GP Panel Product No.	Max. Cont. Current	List Price GO-5GPP	List Price Adders, GO-5GPP								
				NEMA 12 Enclosure	NEMA 3R Enclosure	Conformal Coating	6% AC Line Impedance[1]	3% Load Reactor	Circuit Breaker	Dynamic Brake[2]	Matrix Harmonic Filter[3]	Motor Space Heater & Extra VA CPT[4]
1	6KGPN30011RDXXX	1.7	$3663.00	$570.00	$1000.00	$210.00	$530.00	$570.00	$636.00	$125.00	N/A	$400.00
2	6KGPN30021RDXXX	2.7	$4032.00	$570.00	$1000.00	$210.00	$530.00	$570.00	$636.00	$150.00	N/A	$400.00
3	6KGPN30031RDXXX	3.9	$4418.00	$570.00	$1000.00	$210.00	$553.00	$580.00	$636.00	$175.00	N/A	$400.00
5	6KGPN30051RDXXX	6.1	$4862.00	$570.00	$1250.00	$210.00	$620.00	$603.00	$636.00	$200.00	N/A	$400.00
7.5	6KGPN30071RDXXX	9	$5473.00	$570.00	$1250.00	$210.00	$778.00	$610.00	$636.00	$230.00	N/A	$400.00
10	6KGPN30101RDXXX	11	$6584.00	$570.00	$1500.00	$210.00	$808.00	$813.00	$636.00	$260.00	N/A	$400.00
15	6KGPN30151RDXXX	18	$6977.00	$590.00	$1500.00	$210.00	$1069.00	$880.00	$636.00	$335.00	N/A	$400.00
20	6KGPN30201RDXXX	22	$8063.00	$590.00	$1750.00	$210.00	$1069.00	$880.00	$636.00	$410.00	N/A	$400.00
25	6KGPN30251RDXXX	27	$9679.00	$590.00	$1750.00	$210.00	$1214.00	$917.00	$636.00	$460.00	N/A	$400.00
30	6KGPN30301RDXXX	34	$12712.00	$740.00	$1750.00	$210.00	$1214.00	$945.00	$755.00	$510.00	N/A	$400.00
40	6KGPN30401RDXXX	41	$14102.00	$740.00	$2000.00	$210.00	$1266.00	$1333.00	$766.00	$630.00	N/A	$400.00
50	6KGPN30501RDXXX	52	$15841.00	$740.00	$2000.00	$210.00	$1266.00	$1333.00	$766.00	$770.00	N/A	$400.00
60	6KGPN30601RDXXX	62	$19000.00	$890.00	$2500.00	$210.00	$1320.00	$1567.00	$1590.00	$910.00	N/A	$400.00
75	6KGPN30751RDXXX	83	$25572.00	$1780.00	$3500.00	$210.00	$1530.00	$2213.00	$1845.00	$1030.00	N/A	$400.00
100	6KGPN31002RDXXX	100	$30401.00	$2115.00	$3500.00	$210.00	$1620.00	$2399.00	$1845.00	$1170.00	N/A	$400.00

[1]Drive comes standard with 3% line impedance via DC Link Reactor.
[2]Includes DB Chopper rated for 10% duty cycle. DB resistors must be ordered separately.
[3]Matrix filter is only available in NEMA 1 enclosures and is not available with Line or Load reactors.
[4]This option provides a CPT with a minimal 150vA additional power.

AF-650 GP Enclosed Drives Options Pricing

Operator Devices

Option Description	Option Code	List Adder
None (includes HOA)	X	$0.00
Elapsed Time Meter (ETM)	E	$275.00
Forward/Reverse Selector[1,2]	F	$132.00
Drive Run & Fault Pilot Lights	L	$250.00
Speed Potentiometer	P	$115.00
Start /Stop Operators[2]	S	$240.00

Control Options

Option Description	Option Code	List Adder
None	X	$0.00
Encoder Module[3]	E	$400.00
Additional Input and Output[3,4]	M	$600.00
Loss of Reference Control, Run @ Preset Speed[5]	R	$50.00
Resolver Module[3]	S	$400.00
Relay Output Module[3]	Y	$475.00

Communication Options

Option Description	Option Code	List Adder
Standard (Modbus RTU)	X	$0.00
DeviceNet	D	$600.00
Ethernet IP[6]	E	$700.00
Profibus DP	P	$725.00
ProfiNet RT	N	$700.00
Modbus TCP[6]	M	$700.00

[1]Forward/Reverse option is only available on Non-Bypass units.
[2]Forward/Reverse and Start/Stop options are not available together.
[3]Only one Control Option Card can be installed at a time.
[4]Via General Purpose I/O - OPCGPIO (24V DIO, 0-10V Input, second 4-20mA AO).
[5]Applies to 4-20mA Analog Speed Reference only.
[6]The Ethernet IP and Modbus TCP communication cards use two option slots. When either is installed, no other option card can be supplied.

Model Number and Pricing Example

Description:

460Vac, 25HP HVAC 3 Contactor Bypass Drive with 5% AC Line Reactor, NEMA 3 Enclosure, Extra VA and Space Heater, Start/Stop Operators, an Encoder module and Modbus RTU communications.

Model Number: 6KGPH30256EDS1X

460Vac, 25 HP 3 contactor bypass drive base list price:	$7445.00
NEMA 3R Enclosure list adder	$1750.00
5% AC line reactor list adder:	$1214.00
Extra VA & Space heater:	$400.00
Start/Stop Operators:	$240.00
Encoder Module:	$400.00
Total List Price	$11449.00

Outline Dimensions & Weights for Type 1 Enclosures

Enclosed Drive	Enclosure Type	Weight (lbs)	Weight (kgs)	H x W x D (in)	H x W x D (mm)	Drawing #
1-5 HP@208V, 1-10 HP@460V & 1-10 HP@575V	Slimline	168	76	53.90 x 13.10 x 13.56	1370 x 323 x 345	55-217761
7.5-20 HP@208V, 15-40 HP@460V & 15-40 HP@575V	Slimline	331	150	70.24 x 17.10 x 15.56	1784 x 434 x 395	55-217762
25-30 HP@208V, 50-60 HP@460V & 50-60 HP@575V	Slimline	413	187	72.24 x 24.00 x 17.56	1835 x 607 x 446	55-217763
40-50 HP@208V, 75-100 HP@460V & 75-100 HP@575V	Traditional	816	370	78.08 x 37.93 x 22.36	1983 x 963 x 567	55-217764
125-300 HP@460V	Traditional	1628	738	94.24 x 48.00 x 25.80	2394 x 1219 x 655	55-217765

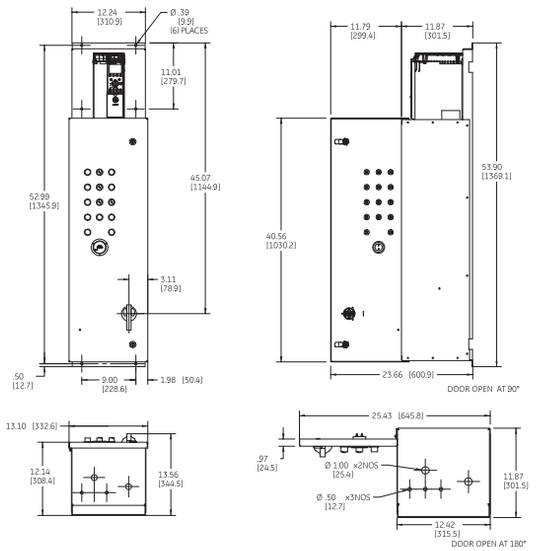

1-5 HP@208V, 1-10 HP@460V & 1-10 HP@575V

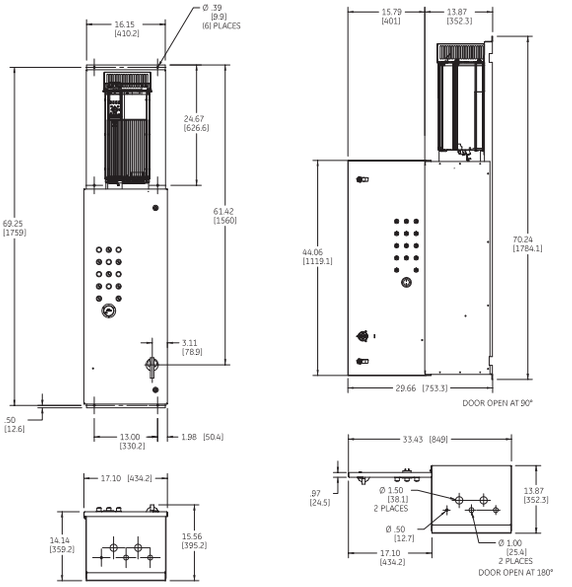

7.5-20 HP@208V, 15-40 HP@460V & 15-40 HP@575V

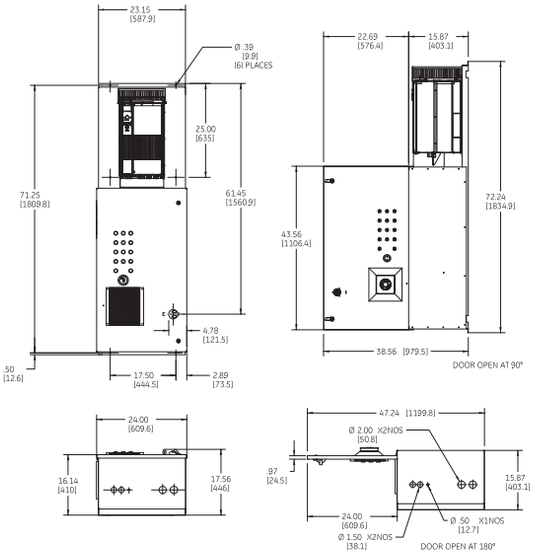

25-30 HP@208V, 50-60 HP@460V & 50-60 HP@575V

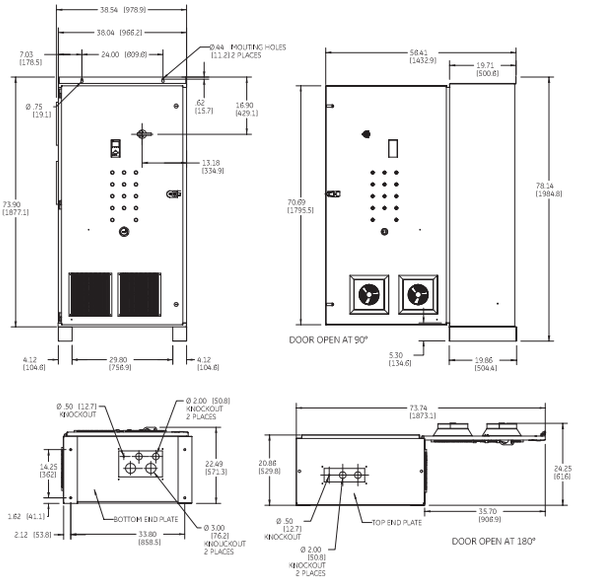

40-50 HP@208V, 75-100 HP@460V & 75-100 HP@575V

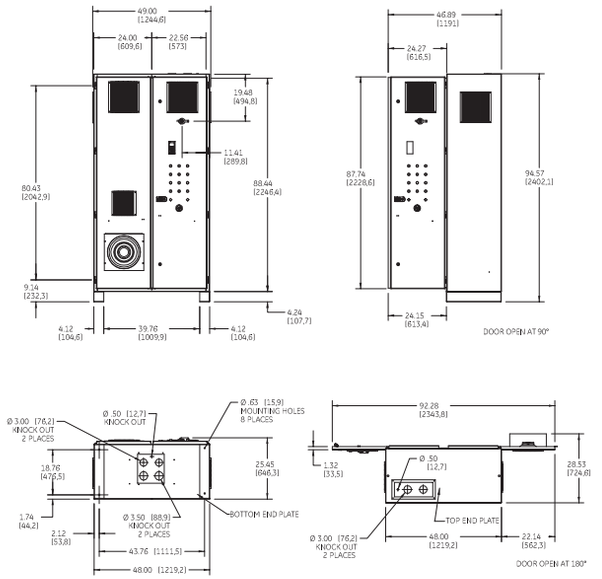

125-300 HP@460V

Outline Dimensions & Weights for Type 12 Enclosures

Enclosed Drive	Enclosure Type	Weight (lbs)	Weight (kgs)	H x W x D (in)	H x W x D (mm)	Drawing #
1-5 HP@208V, 1-10 HP@460V & 1-10 HP@575V	Traditional	215	97	42.24 x 23.94 x 14.81	1073 x 608 x 376	55-217766
7.5-20 HP@208V, 15-40 HP@460V & 15-40 HP@575V	Traditional	434	197	56.18 x 30.94 x 18.25	1427 x 786 x 464	55-217767
25-30 HP@208V, 50-60 HP@460V & 50-60 HP@575V	Traditional	555	252	61.21 x 33.22 x 21.66	1631 x 843 x 550	55-217768
40-50 HP@208V, 75-100 HP@460V & 75-100 HP@575V	Traditional	821	372	78.14 x 39.10 x 23.09	1985 x 933 x 587	55-217769
125-300 HP@460V	Traditional	1606	729	94.48 x 49.0 x 26.09	2400 x 1245 x 663	55-217770

Outline Dimensions & Weights for Type 3R Enclosures

Enclosed Drive	Enclosure Type	Weight (lbs)	Weight (kgs)	H x W x D (in)	H x W x D (mm)	Drawing #
1-5 HP@208V, 1-10 HP@460V & 1-10 HP@575V	Traditional	229	104	42.24 x 26.86 x 16.73	1073 x 682 x 425	55-217771
7.5-20 HP@208V, 15-40 HP@460V & 15-40 HP@575V	Traditional	452	205	56.18 x 34.86 x 21.13	1427 x 885 x 537	55-217772
25-30 HP@208V, 50-60 HP@460V & 50-60 HP@575V	Traditional	591	268	64.21 x 41.07 x 24.68	1631 x 1043 x 627	55-217773
40-50 HP@208V, 75-100 HP@460V & 75-100 HP@575V	Traditional	870	395	78.15 x 46.01 x 25.97	1985 x 1169 x 660	55-217774
125-150 HP@460V	Traditional	1271	576	94.48 x 56.89 x 28.70	2340 x 1445 x 729	55-217775

Outline Dimensions & Weights for Disconnect Drive Type 1 Enclosures

Enclosed Drive	Enclosure Type	Weight (lbs)	Weight (kgs)	H x W x D (in)	H x W x D (mm)	Drawing #
1-20HP@460V	Slimline	120	54	31.14 x 15.15 x 14.99	791.0 x 384.8 x 380.8	270A8160
25-60HP@460V	Slimline	245	111	47.94 x 19.95 x 18.04	1217.7 x 506.7 x 458.1	270A8162
75-100HP@460V	Slimline	345	157	60.22 x 25.91 x 19.51	1529.6 x 658.1 x 495.6	270A8163
125-150HP@460V	Traditional	707	321	64.50 x 35.96 x 23.26	1638.3 x 913.4 x 590.8	270A8164
200-300HP@460V	Traditional	927	421	77.26 x 38.49 x 23.29	1962.4 x 977.7 x 591.4	270A8165
350-550HP@460V	Traditional	1575	715	87.55 x 54.00 x 26.88	2223.6 x 1371.6 x 682.8	270A8166

Elementary and Connection Wiring Diagrams

Disconnect Drive	55-537954
Non-Bypass – with and without an Output Contactor	55-537806
2 Contactor Bypass	55-537805
3 Contactor Bypass	55-537804

Visit http://www.geindustrial.com/drives for additional product information including programming guides, drawings, programming software, an energy savings calculator, and much more.

Warranty Coverage

Warranty period is 36 months after shipment from the company. This includes all drives, panels and 18 Pulse / MultiPulse panels, but does not include the DV300 DC Drives. The DV300 DC Drives have a warranty period of 18 months after shipment only. Before calling the Post Sales Service number to determine warranty status, the drive serial number will be required. The serial number is located on the drive nameplate.

Extended Warranty Pricing (Excludes DV300 DC Drives)

For an extended warranty period of 12 months, add 10% to the net price. For an extended warranty period of 24 months, add an additional 20% to the net price.

After Shipment	Price Addition
36 months	None–Standard Warranty
48 months	10% Net Price Adder
60 months	20% Net Price Adder

Out-of-Warranty Procedures

When the defective part has been identified, contact your local authorized GE standard drives distributor to order a replacement part.

If assistance is required to determine warranty status, identify defective parts, or obtain the name of your local distributor, call:

1-888-GE-RESOLve

(1-888-437-3765, United States)

(1-804-965-1062, International)

GE Post Sales Service Center

Technical Support

For Pre-Sales application support and post sales troubleshooting and installation support, call:

1-800-GE1-STOP

(1-800-431-7867, United States)

(1-804-965-1062, International)

NOTES: